ICOM

SERVICE MANUAL

VHF MARINE TRANSCEIVER

IC-M35
IC-M36

S-14520XZ-C1
Oct. 2008

Icom Inc.

INTRODUCTION

This service manual describes the latest technical information for the **IC-M35** and **IC-M36** VHF MARINE TRANSCEIVER at the time of publication.

MODEL	VERSION	AC ADAPTER	TX Hi-POWER
IC-M35	[CHN]	BC-174E	6 W
	[EUR]		
	[UK]	N/A	
	[FRG]	BC-174E	6 W (1 W)
	[HOL]		6 W
	[AUS]	BM-95V	5 W
IC-M36	[USA]	BC-147SA	6 W
	[SEA]	BC-174E	

To upgrade quality, any electrical or mechanical parts and internal circuits are subject to change without notice or obligation.

UNIT ABBREVIATIONS:
CH=CHASSIS
M=MAIN UNIT

(IC-M36)

CAUTION

NEVER connect the transceiver to an AC outlet or to a DC power supply that uses more than specified. This will ruin the transceiver.

DO NOT reverse the polarities of the power supply when connecting the transceiver.

DO NOT apply an RF signal of more than 20 dBm (100 mW) to the antenna connector. This could damage the transceiver's front-end.

ORDERING PARTS

Be sure to include the following four points when ordering replacement parts:

1. 10-digit Icom parts numbers
2. Component name
3. Equipment model name and unit name
4. Quantity required

<ORDER EXAMPLE>

1110003491	S.IC	TA31136FNG	IC-M36	MAIN UNIT	5 pieces
8820001210	Screw	2438 screw	IC-M35	Top cover	10 pieces

Addresses are provided on the inside back cover for your convenience.

REPAIR NOTES

1. Make sure that the problem is internal before disassembling the transceiver.
2. **DO NOT** open the transceiver until the transceiver is disconnected from its power source.
3. **DO NOT** force any of the variable components. Turn them slowly and smoothly.
4. **DO NOT** short any circuits or electronic parts. An insulated tuning tool **MUST** be used for all adjustments.
5. **DO NOT** keep power ON for a long time when the transceiver is defective.
6. **DO NOT** transmit power into a Standard Signal Generator or a Sweep Generator.
7. **ALWAYS** connect a 50 dB to 60 dB attenuator between the transceiver and a Deviation Meter or Spectrum Analyzer when using such test equipment.
8. **READ** the instructions of test equipment throughly before connecting a test equipment to the transceiver.

Icom, Icom Inc. and ICOM logo are registered trademarks of Icom Incorporated (Japan) in the United States, the United Kingdom, Germany, France, Spain, Russia and/or other countries.

TABLE OF CONTENTS

SECTION 1 SPECIFICATIONS

SECTION 2 INSIDE VIEWS

SECTION 3 DISASSEMBLY INSTRUCTION

SECTION 4 CIRCUIT DESCRIPITON

4-1 RECEIVER CIRCUITS 4-1
4-2 TRANSMITTER CIRCUITS 4-2
4-3 FREQUENCY SYNTHESIZER CIRCUITS 4-3
4-4 VOLTAGE BLOCK DIAGRAM 4-3
4-5 PORT ALLOCATIONS 4-4

SECTION 5 ADJUSTMENT PROCEDURES

5-1 PREPARATION 5-1
5-2 FREQUENCY ADJUSTMENTS 5-3
5-3 RECEIVE ADJUSTMENTS 5-4
5-4 TRANSMIT ADJUSTMENTS 5-5

SECTION 6 PARTS LIST

SECTION 7 MECHANICAL PARTS

SECTION 8 BOARD LAYOUTS

SECTION 9 BLOCK DIAGRAM

SECTION 10 VOLTAGE DIAGRAM

SECTION 1 SPECIFICATIONS

1-1 IC-M35

◇ GENERAL

- Frequency coverage : Transmit 156.000–161.450 MHz
  Receive 156.000–163.425 MHz
- Mode : FM (16K0G3E)
- Channel spacing : 25 kHz
- Power supply requirement : BP-251 and BP-252 only
- Current drain (at 7.4 V DC)
  - TX at 6 W : 1.5 A typical
    - at 5 W : 1.3 A typical
    - at 1 W : 0.7 A typical
    - at 0.5 W : 0.6 A typical
  - RX Max. audio
    - Internal speaker : 0.3 A typical
    - External speaker : 0.2 A typical
  - Power save : 10 mA typical
- Frequency stability : ±1.5 kHz
- Operating temperature range : –15°C to +55°C
- Dimensions : 62 (W) × 139.5 (H) × 43 (D) mm
  (Projections not included)
- Weight : Approx. 295 g
  (incl. BP-252, FA-SC58V and MB-109)

◇ TRANSMITTER

- Output power (at 7.4 V DC) : 6 W (High) and 1 W (Low)*
  *5 W (High) and 1 W (Low) for Australian version
  1 W (High) and 0.5 W (Low) for German version depending on the pre-setting
- Modulation system : Variable reactance frequency modulation
- Maximum frequency deviation : ±5 kHz
- Adjacent channel power : 70 dB
- Spurious emissions : 0.25 µW

◇ RECEIVER

- Receive system : Double-conversion superheterodyne
- Sensitivity (20 dB SINAD) : –2 dBµ emf typical
- Squelch sensitivity : –6 dBµ emf typical (at threshold)
- Intermodulation : 68 dB
- Spurious response : 70 dB*
  *65 dB for Australian version
- Adjacent channel selectivity : 70 dB
- Audio output power (at 10% distortion)
  - Internal speaker : 0.7 W typical with a 16 Ω load
  - External speaker : 0.2 W with an 8 Ω load

1-2 IC-M36

◇ GENERAL

- Frequency coverage : Transmit 156.025–157.425 MHz
  Receive 156.050–163.275 MHz
- Mode : FM (16K0G3E)
- Channel spacing : 25 kHz
- Power supply requirement : BP-251 and BP-252 only
- Current drain (at 7.4 V DC) : TX (6 W/1 W) 1.5 A/0.7 A typical
  Max. audio 0.3 A typical (internal speaker)
  0.2 A typical (external speaker)
  Power save 10 mA typical
- Frequency stability : ±10 ppm
- Operating temperature range : –20°C to +60°C; –4°F to +140°F
- Dimensions : 62 (W) × 139.5(H) × 43(D) mm
  (projections not included) $2\frac{7}{16}$(W) × $5\frac{1}{2}$(H) × $1\frac{11}{16}$(D) inch
- Weight : Approx. 295 g; 10.4 oz
  (incl. BP-252, FA-SC58V and MB-109)

◇ TRANSMITTER

- Output power (at 7.4 V DC) : 6 W (High) and 1 W (Low)
- Modulation system : Variable reactance frequency modulation
- Maximum frequency deviation : ±5 kHz
- Adjacent channel power : 70 dB
- Spurious emissions : –68 dBc typical

◇ RECEIVER

- Receive system : Double-conversion superheterodyne
- Sensitivity (12 dB SINAD) : 0.25 µV typical
- Squelch sensitivity : 0.35 µV typical (at threshold)
- Intermodulation : 70 dB typical
- Spurious response : 70 dB typical
- Adjacent channel selectivity : 70 dB typical
- Audio output power (at 10% distortion)
  - Internal speaker : 0.70 W typical with a 16 Ω load
  - External speaker : 0.35 W typical with an 8 Ω load

All stated specifications are subject to change without notice or obligation.

1-3 MARINE CHANNEL LIST

• For IC-M35

• International channels

CH	Frequency (MHz)		CH	Frequency (MHz)		CH	Frequency (MHz)		CH	Frequency (MHz)		CH	Frequency (MHz)		CH	Frequency (MHz)	
	Transmit	Receive		Transmit	Receive		Transmit	Receive		Transmit	Receive		Transmit	Receive		Transmit	Receive
01	156.050	160.650	11	156.550	156.550	21	157.050	161.650	62	156.125	160.725	72	156.625	156.625	82	157.125	161.725
02	156.100	160.700	12	156.600	156.600	22	157.100	161.700	63	156.175	160.775	73	156.675	156.675	83	157.175	161.775
03	156.150	160.750	13	156.650	156.650	23	157.150	161.750	64	156.225	160.825	74	156.725	156.725	84	157.225	161.825
04	156.200	160.800	14	156.700	156.700	24	157.200	161.800	65	156.275	160.875	75*2	156.775	156.775	85	157.275	161.875
05	156.250	160.850	15*1	156.750	156.750	25	157.250	161.850	66	156.325	160.925	76*2	156.825	156.825	86	157.325	161.925
06	156.300	156.300	16	156.800	156.800	26	157.300	161.900	67	156.375	156.375	77	156.875	156.875	87	157.375	157.375
07	156.350	160.950	17*1	156.850	156.850	27	157.350	161.950	68	156.425	156.425	78	156.925	161.525	88	157.425	157.425
08	156.400	156.400	18	156.900	161.500	28	157.400	162.000	69	156.475	156.475	79	156.975	161.575			
09	156.450	156.450	19	156.950	161.550	60	156.025	160.625	70	Rx only	156.525	80	157.025	161.625			
10	156.500	156.500	20	157.000	161.600	61	156.075	160.675	71	156.575	156.575	81	157.075	161.675			

*1 Channels 15 and 17 may also be used for on-board communications provided the effective radiated power does not exceed 1 W, and subject to the national regulations of the administration concerned when these channels are used in its territorial waters.

*2 The output power of channels 75 and 76 are limited to low power (1 W) only. The use of these channels should be restricted to navigation-related communications only and all precautions should be taken to avoid harmful interference to channel 16, e.g. by means geographical separation.

• **USA channels** (for U.K. versions only)

CH	Frequency (MHz)		CH	Frequency (MHz)		CH	Frequency (MHz)		CH	Frequency (MHz)		CH	Frequency (MHz)		CH	Frequency (MHz)	
	Transmit	Receive		Transmit	Receive		Transmit	Receive		Transmit	Receive		Transmit	Receive		Transmit	Receive
01A	156.050	156.050	12	156.600	156.600	22A	157.100	157.100	64A	156.225	156.225	77	156.875	156.875	86	157.325	161.925
—	——	——	13	156.650	156.650	23A	157.150	157.150	65A	156.275	156.275	78A	156.925	156.925	86A	157.325	157.325
03A	156.150	156.150	14	156.700	156.700	24	157.200	161.800	66A	156.325	156.325	79A	156.975	156.975	87	157.375	161.975
—	——	——	15	156.750	156.750	25	157.250	161.850	67	156.375	156.375	80A	157.025	157.025	87A	157.375	157.375
05A	156.250	156.250	16	156.800	156.800	26	157.300	161.900	68	156.425	156.425	81A	157.075	157.075	88	157.425	162.025
06	156.300	156.300	17	156.850	156.850	27	157.350	161.950	69	156.475	156.475	82A	157.125	157.125	88A	157.425	157.425
07A	156.350	156.350	18A	156.900	156.900	28	157.400	162.000	70	Rx only	156.525	83A	157.175	157.175	P4*	161.425	161.425
08	156.400	156.400	19A	156.950	156.950	37A*	157.850	157.850	71	156.575	156.575	84	157.225	161.825			
09	156.450	156.450	20	157.000	161.600	61A	156.075	156.075	72	156.625	156.625	84A	157.225	157.225			
10	156.500	156.500	20A	157.000	157.000	—	——	——	73	156.675	156.675	85	157.275	161.875			
11	156.550	156.550	21A	157.050	157.050	63A	156.175	156.175	74	156.725	156.725	85A	157.275	157.275			

*UK marina channels: M1=37A (Tx/Rx: 157.850 MHz), M2=P4 (Tx/Rx: 161.425 MHz) for U.K. versions only.
The programmed channels are differ according to versions.

• For IC-M36

Channel number			Frequency (MHz)	
USA	INT	CAN	Transmit	Receive
	01	01	156.050	160.650
01A			156.050	156.050
	02	02	156.100	160.700
	03	03	156.150	160.750
03A			156.150	156.150
	04		156.200	160.800
		04A	156.200	156.200
	05		156.250	160.850
05A		05A	156.250	156.250
06	06	06	156.300	156.300
	07		156.350	160.950
07A		07A	156.350	156.350
08	08	08	156.400	156.400
09	09	09	156.450	156.450
10	10	10	156.500	156.500
11	11	11	156.550	156.550
12	12	12	156.600	156.600
13*	13	13*	156.650	156.650
14	14	14	156.700	156.700
15*	15*	15*	156.750	156.750
16	16	16	156.800	156.800
17*	17	17*	156.850	156.850
	18		156.900	161.500
18A		18A	156.900	156.900
	19		156.950	161.550
19A		19A	156.950	156.950
20	20	20*	157.000	161.600
20A			157.000	157.000

Channel number			Frequency (MHz)	
USA	INT	CAN	Transmit	Receive
	21	21	157.050	161.650
21A		21A	157.050	157.050
		21b	Rx only	161.650
	22		157.100	161.700
22A		22A	157.100	157.100
	23	23	157.150	161.750
23A			157.150	157.150
24	24	24	157.200	161.800
25	25	25	157.250	161.850
		25b	Rx only	161.850
26	26	26	157.300	161.900
27	27	27	157.350	161.950
28	28	28	157.400	162.000
		28b	Rx only	162.000
	60	60	156.025	160.625
	61		156.075	160.675
61A		61A	156.075	156.075
	62		156.125	160.725
		62A	156.125	156.125
	63		156.175	160.775
63A			156.175	156.175
	64	64	156.225	160.825
64A		64A	156.225	156.225
	65		156.275	160.875
65A	65A	65A	156.275	156.275
	66		156.325	160.925
66A	66A	66A*	156.325	156.325
67*	67	67	156.375	156.375

Channel number			Frequency (MHz)	
USA	INT	CAN	Transmit	Receive
68	68	68	156.425	156.425
69	69	69	156.475	156.475
70	70	70	RX only	156.525
71	71	71	156.575	156.575
72	72	72	156.625	156.625
73	73	73	156.675	156.675
74	74	74	156.725	156.725
75*	75*	75*	156.775	156.775
76*	76*	76*	156.825	156.825
77*	77	77*	156.875	156.875
	78		156.925	161.525
78A		78A	156.925	156.925
	79		156.975	161.575
79A		79A	156.975	156.975
	80		157.025	161.625
80A		80A	157.025	157.025
	81		157.075	161.675
81A		81A	157.075	157.075
	82		157.125	161.725
82A		82A	157.125	157.125
	83	83	157.175	161.775
83A		83A	157.175	157.175
		83b	Rx only	161.775
84	84	84	157.225	161.825
84A			157.225	157.225
85	85	85	157.275	161.875
85A			157.275	157.275
86	86	86	157.325	161.925

Channel number			Frequency (MHz)	
USA	INT	CAN	Transmit	Receive
86A			157.325	157.325
87	87	87	157.375	161.975
87A			157.375	157.375
88	88	88	157.425	162.025
88A			157.425	157.425

WX channel	Frequency (MHz)	
	Transmit	Receive
1	RX only	162.550
2	RX only	162.400
3	RX only	162.475
4	RX only	162.425
5	RX only	162.450
6	RX only	162.500
7	RX only	162.525
8	RX only	161.650
9	RX only	161.775
10	RX only	163.275

* Low power only.

NOTE: Simplex channels, 3, 21, 23, 61, 64, 81, 82 and 83 **CANNOT** be lawfully used by the general public in U.S.A. waters.

• MAIN UNIT
(TOP VIEW)

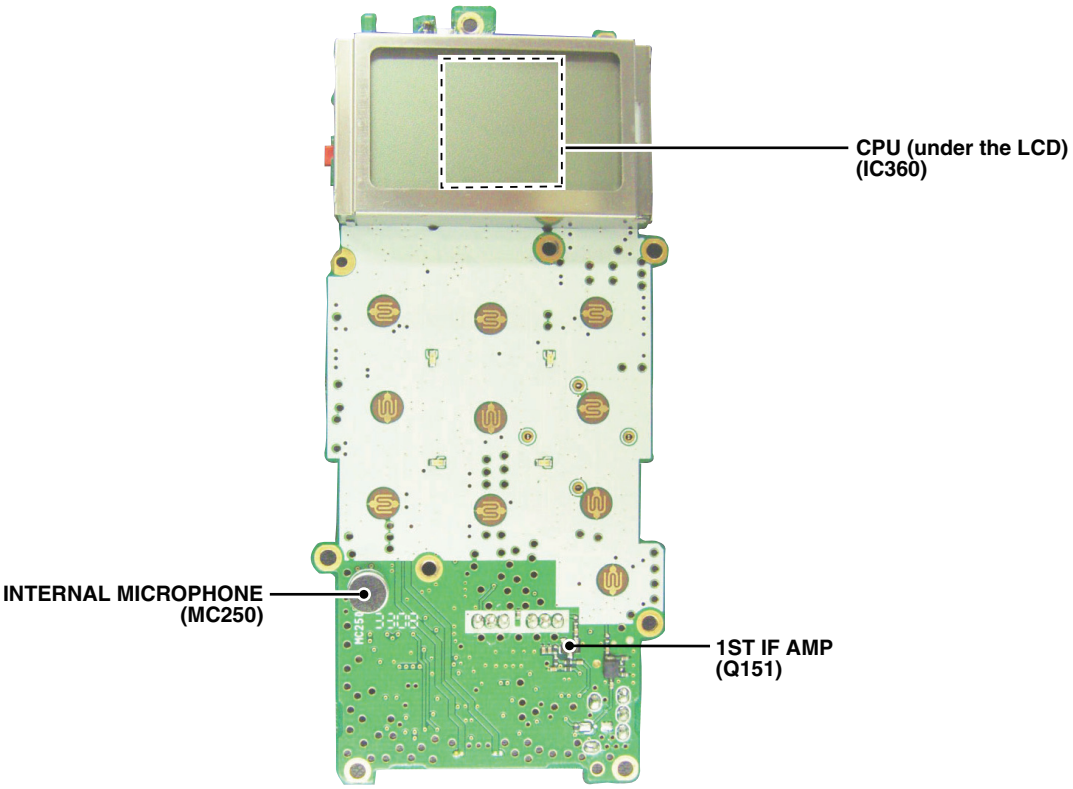

• MAIN UNIT
(BOTTOM VIEW)

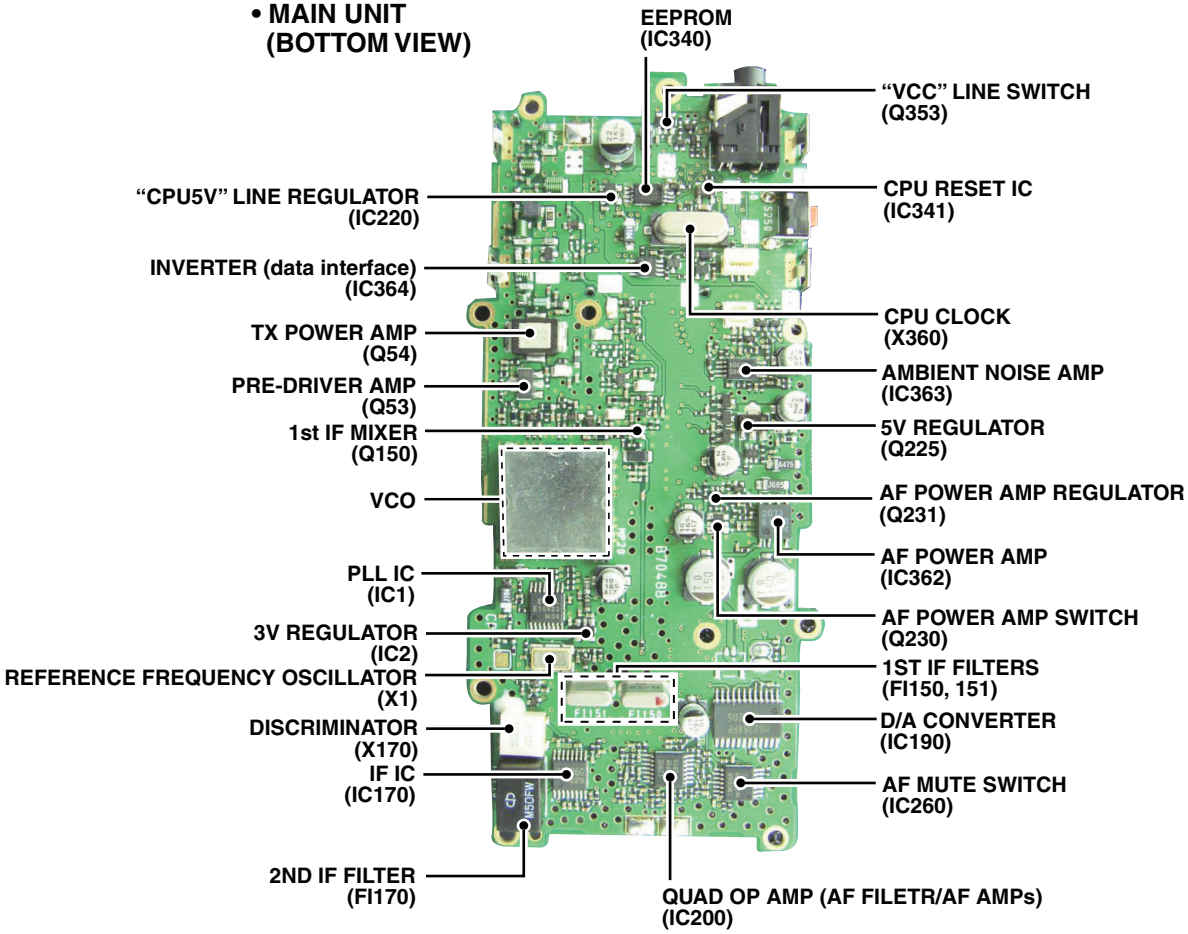

SECTION 3 DISASSEMBLY INSTRUCTION

1. REMOVING FRONT PANEL

- Unscrew 4 screws from the rear panel, and remove the rear panel from the front panel.
  NOTICE: NOT to lost 2 o-rings.

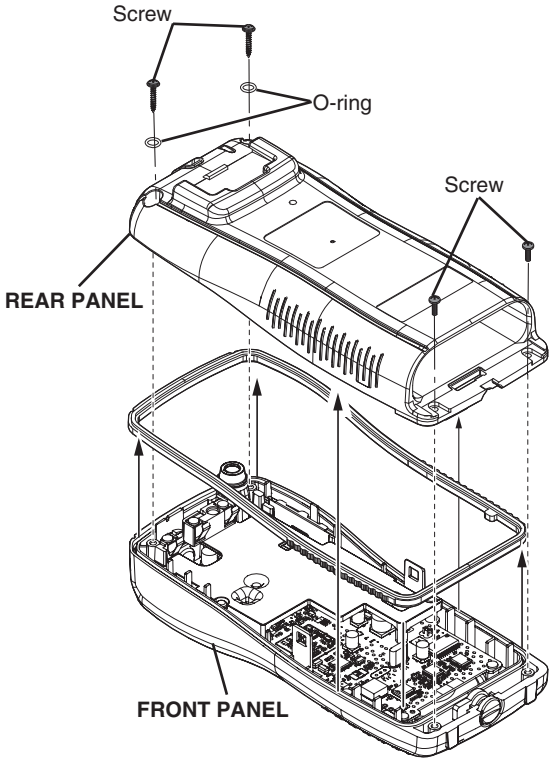

2. REMOVING CHASSIS

1) Unsolder 2 points from the speaker.
2) Unscrew ANT nut from the antenna connector, and 5 screws from the MAIN UNIT.
3) Take off the chassis with MAIN UNIT from the front panel in the direction of the arrow.

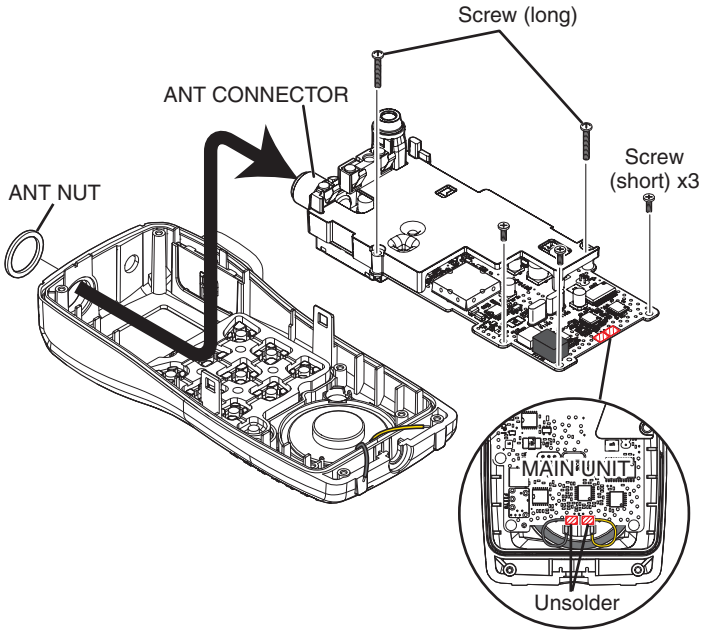

3. REMOVING MAIN UNIT

1) Unsolder 2 points from the top side, and 1 point from the bottom side.

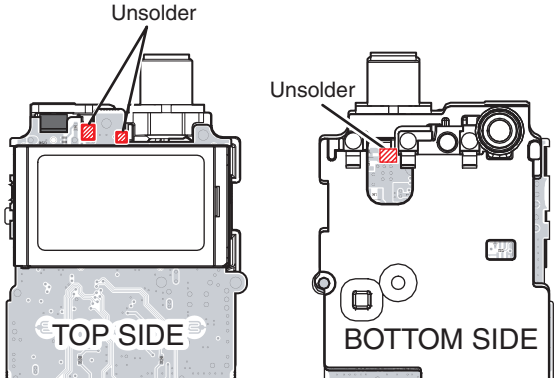

2) Unscrew 4 screws from the MAIN UNIT.
3) Disconnect the microphone cable from the MAIN UNIT.
4) Take off the MAIN UNIT from the chassis.

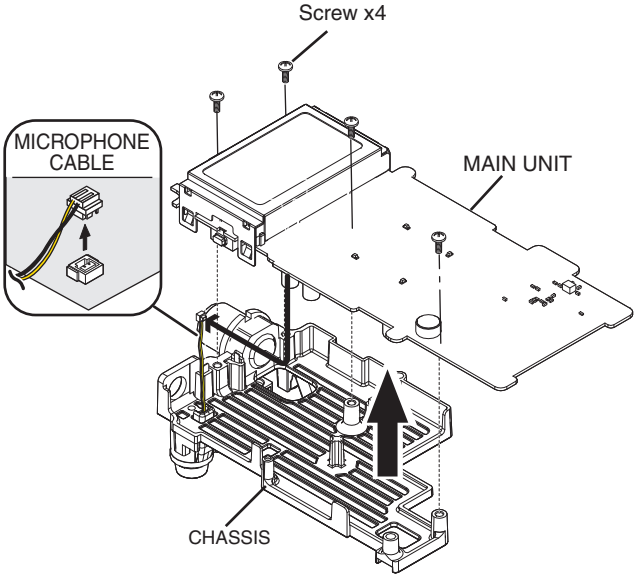

4-1 RECEIVER CIRCUITS

RF CIRCUITS

RF circuits consist of RF filters, antenna switch (ANT SW), RF amplifier (RF AMP), etc., and extracts and amplifies the signal of frequency which is desired to receive.

• ANTENNA SWITCHING CIRCUIT

The RF signals from the antenna are passed through the LPF (L81, 82, C83–86, 89) and antenna SW (D52, 90, L90, C90, 91), then applied to the RF AMP (Q90) via the 2-staged tuned BPF (D92, 93, L92, 93, C95, 97–100, C117).

• RF AMPLIFIER

The filtered RX signals are amplified by the RF AMP (Q90), and passed through another 2-staged BPF (D130, 131, L96, 97, 110, 112–115) to remove unwanted signals. The filtered signals are applied to the 1st mixer (Q150).

• RF CIRCUITS

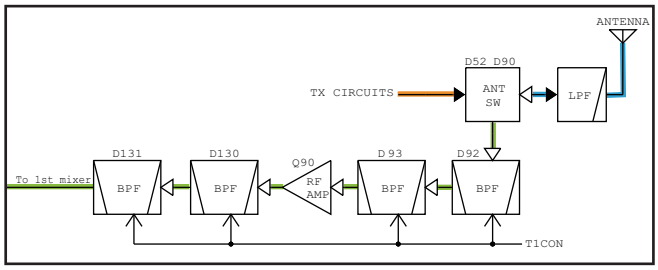

1ST IF, 2ND IF AND DEMODULATOR CIRCUITS

• 1ST IF CIRCUITS

The RX signals are mixed with 1st LO signals to be converted into the 21.7 MHz 1st IF signal at the 1st mixer (Q150). The converted 1st IF signal is filtered by the crystal filter (FI150, 151) to remove unwanted out-of-band signals.

The filtered 1st IF signal is amplified by the 1st IF AMP (Q151), then applied to the IF IC (IC170, pin 16).

• 2ND IF AND DEMODULATOR CIRCUITS

IC170 is an IF IC contains 2nd local oscillator, 2nd mixer, limiter and quadrature detector in its package.

The 21.25 MHz reference frequency signal from the PLL IC (IC1, pin 2) is applied to the IF IC (IC170, pin 2) as the 2nd LO signal, and mixed with 21.7 MHz 1st IF signal from the 1st AMP (Q151). The resulting signal of 450 kHz 2nd IF signal is output from pin 3 of IC170.

The 2nd IF signal is filtered by external ceramic filter (FI170) to extract 450 kHz signal only, then applied to internal quadrature detector and frequency-demodulated. The demodulated AF signals are output from pin 9.

• 1ST IF CIRCUITS

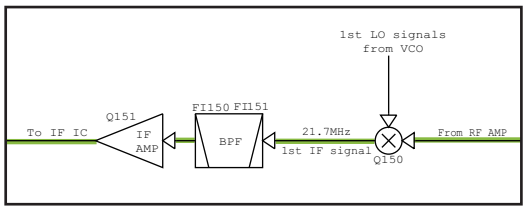

The quadrature detector is a frequency demodulator which uses a discriminator (X170) as a phase delayer, and provides demodulation without any adjustment.

SQUELCH CIRCUIT

A portion of AF signals from the IF IC is level-adjusted by the D/A converter (IC190), and applied to the noise amplifer (IC170, R174–176, C179, 180).

Only noise components (approx. 30 kHz signal) are amplified by the noise amplifier, and rectified by internal noise detector to be converted into DC voltage corresponding to noise level; the squelch voltage. The squelch voltage is applied to the A/D port of the CPU (IC360). The CPU (IC360) compares input voltage and preset squelch level to control audio signals ON/OFF (emit/mute).

RX AF CIRCUITS

The demodulated AF signals from the IF IC (IC170, pin 9) are passed through the AF mute SW (IC260) and LPF (IC200C, R271–273, C264, 265). The filtered AF signals are passed through another LPF (R279, C266) to remove 3 kHz and higher signals, and level-adjusted by the D/A converter (IC190), and de-emphasized by R286, C285 to obtain –6 dB/oct. of frequency response, then applied to AF power amplifier (IC362).

IC362 is an AF power amplifier IC which can provide 0.35 W of output power with 8 ohms load, or 0.7 W of output power with 16 ohms load.

• 2ND IF, DEMODULATOR AND RX AF CIRCUITS

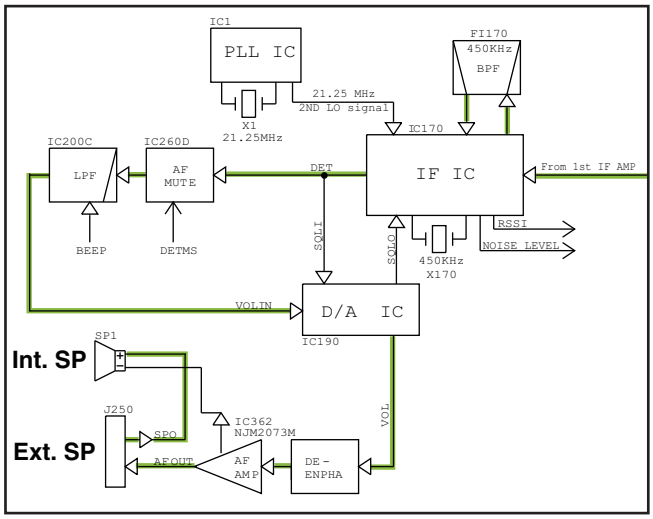

4-2 TRANSMITTER CIRCUITS

TX AF CIRCUITS

AF signals from the microphone (MIC signals) are passed through the MIC line SW (IC260A) and amplified by MIC AMP (IC200B), then passed through the MIC mute SW (IC260C).

The MIC line SW (IC260A) selects the MIC signal path (from int. MIC or from ext. MIC), and the MIC mute SW (IC260C) disconnects the MIC line in receiving.

The MIC signals from the MIC mute SW (IC260C) are adjusted its amplitude (=deviation) by the D/A converter (IC190), and pre-emphasized by R201 and C385 to obtain +6 dB/oct of frequency response.

Pre-emphasized MIC signals are amplitude-limited by the limiter (IC200A) to prevent over deviation, and filtered by the splatter filter (IC200D) to remove 3 kHz and higher signals, then applied to the VCO for frequency modulation.

• TX AF AND MODULATION CIRCUITS

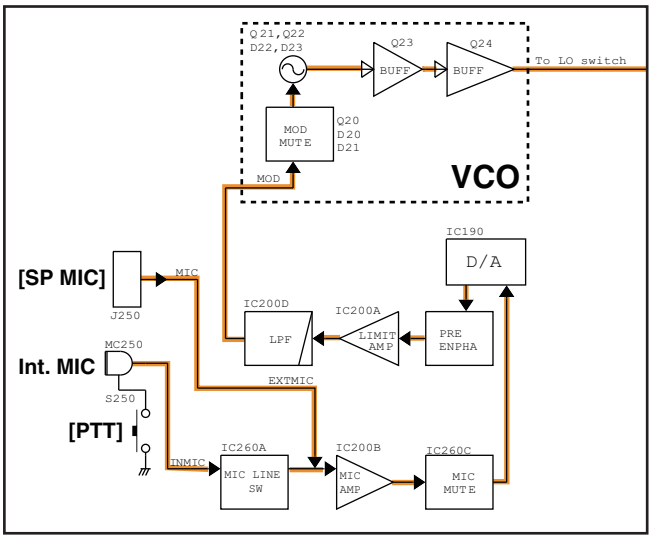

TX AMPLIFIERS

The frequency-modulated signal from the VCO (TX signal) is passed through the LO SW (D50), and amplified by the buffer AMP (Q50), driver AMP (Q53) and power AMP (Q54) in sequence, to obtain TX output power.

APC CIRCUIT

A portion of TX output signal is rectified by D91 to be converted into the DC voltage which corresponds to TX power level.

IC50 compares the detected voltage and TX power setting voltage from D/A converter (IC190). The resulting voltage from IC50 controls the gain of both the driver (Q53) and the power (Q54) AMPs to keep the TX output power stable.

• TX AMPLIFIERS AND APC CIRCUIT

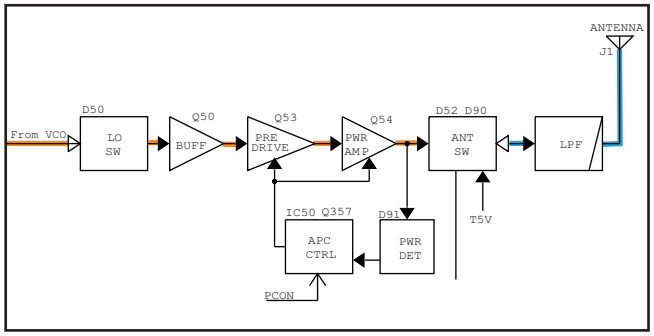

4-3 FREQUENCY SYNTHESIZER CIRCUITS

VCO

While transmitting, the VCO (Q21, 22, D20–23) oscillating frequency is determined by the value of D22, D23, L22, C26 and C27, and the frequency modulation is carried out by adding modulation signals to D20.

While receiving, D21 is turned ON and C28 is connected to the GND to shift the oscillation frequency lower.

The oscillated signals are output via the buffers (Q23, 24).

PLL

IC1 is a PLL IC which contains prescaler, programmable counter, phase comparator and charge pump in its package.

The 21.25 MHz reference frequency signal is fed from X1.

The loop filter for the VCO is composed by R8, R10, R22, C11, C13 and C24.

• FREQUENCY SYNTHESIZER CIRCUITS

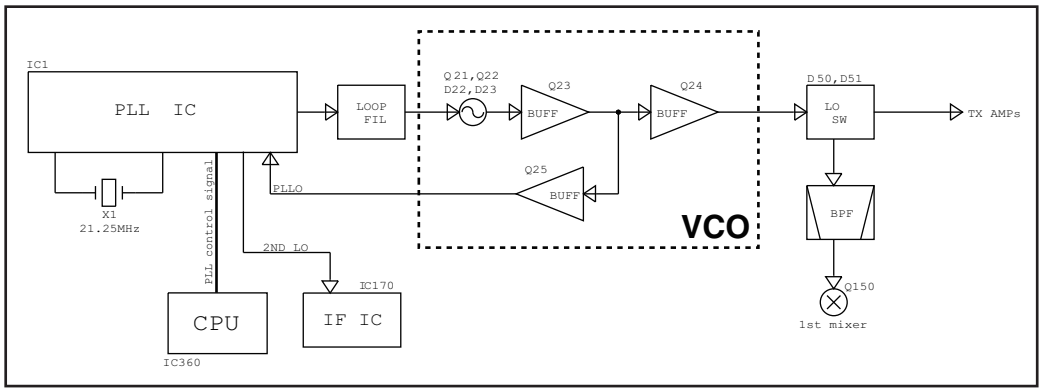

4-4 VOLTAGE BLOCK DIAGRAM

Voltage from the power supply is routed to the whole of the transceiver via regulators and switches.

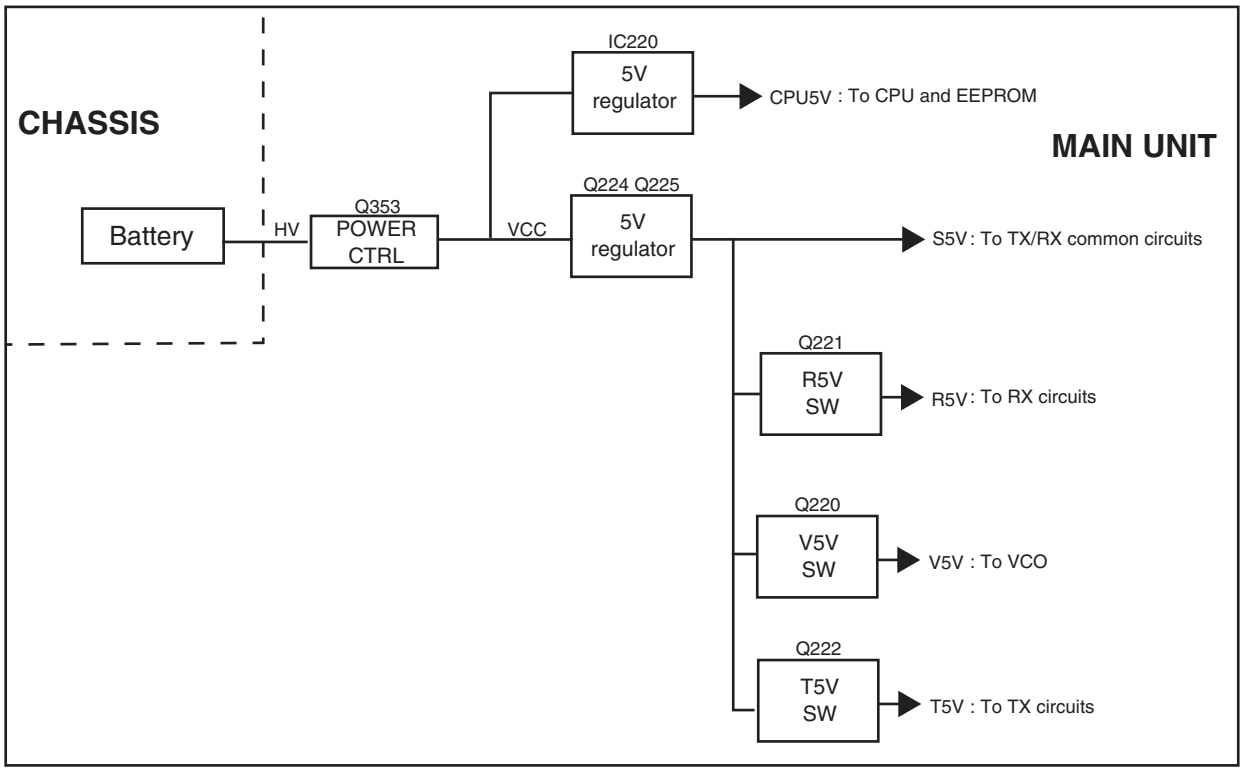

4-5 PORT ALLOCATIONS

• CPU (IC360)

PIN No.	LINE NAME	DESCRIPTION
1	BEEP	Beep sound (Squarewave) output.
2	PS	PLL power save mode control.
3	TDEC	Decoded tone signal output. (for monitor)
4	DASTB	Strobe signal to D/A converter.
5	PLSTB	Strobe signal to PLL IC.
6	ERXDI	External serial interface. (cloning input)
7	ETXDO	External serial interface. (cloning output)
10	SDATA	Serial data to PLL IC and D/A converter.
11	SCLK	Serial clock to PLL IC and D/A converter.
12	ESCK	Serial clock for EEPROM.
13	ESDA	Serial clock to/from EEPROM.
25	RESET	CPU reset signal input.
27	TEMPV	Thermistor input. (temparature detection)
28	NDET	Ambient noise level input. (from sub-microphone on the rear)
29	LOINV	Lock voltage input.
30	TDETV	TX power level input. (RF power detection)
31	BATTV	Battery voltage input. (Divided battery voltage)
32	RSSIV	RSSI input. (A/D value from IF IC)
33	NOISV	Noise level input. (A/D value from IF IC)
34	PWSW	[PWR] key input. (H=Pushed.)
35	EXDET	External connection detect input. H=Connected.
36	WDECV	Weather alart tone signal input.
38	ATIS	ATIS signal input.
46–48	COM0	LCD driver common terminals.
51–72	SEG0-SEG21	LCD driver segment terminals.
77	LEDS	Backlight control signal.
79	LCDS	LCD contrast control signal.
80	MICMS	MIC mute SW control signal. L=MIC mute.
84	V5VS	VCO power supply line control signal. L=VCO turned ON.
85	AFVS	AF power AMP control signal. H=AF Power AMP turned ON.
87	S5VS	S5V line control signal. L=While being power-supplied.
88	LOW	TX power control signal.
89	R5VS	R5V line control signal. L=While receiving. (RX circuits activated)
90	T5VS	T5V line control signal. L=While transmitting. (TX circuits activated)
97	TXMS	MIC line mute signal. L=Mute.
98	DETM	RX AF line mute signal. L=Mute.
99	ATTS	N/C
101	PTTM	Internal MIC mute signal. L=Int. MIC mute.
102	EXPTT	External PTT SW input. H=Ext. [PTT] pushed.
103	PTTIN	Internal PTT SW input. H=Int. [PTT] pushed.
104	BTYPE	Battery distinction input.
105	BPCTRL	Aquaquake drain water function contorl signal.
106	WET	Leaking detect input.
107	PON	Main power supply line control signal.
108	16/9	[16/9] key input. (L=Pushed.)
109	CH/WX	[CH/WX] key input. (L=Pushed.)
110	UP	[UP] key input. (L=Pushed.)
111	DOWN	[DWN] key input. (L=Pushed.)
112	FAV	[FAV] key input. (L=Pushed.)
113	LOUD	[LOUD] key input. (L=Pushed.)
114	SCAN	[SCAN] key input. (L=Pushed.)
115	VOL/SQL	[VOL/SQL] key input. (L=Pushed.)
116	H/L	[H/L] key input. (L=Pushed.)
120	UNLKI	PLL unlock signal input. (PLL malfunction detection) H=PLL unlocked.

• D/A CONVERTER (IC190)

PIN No.	LINE NAME	DESCRIPTION
1, 2	FCON	Rference frequency adjustment voltage.
3, 4	PCON	TX output power adjustment voltage.
9, 10	MODC	Deviation adjustment.
11, 12	MSENS	MIC signal level (MIC sensitivity)adjustment.
13, 14	VOLO	AF output level adjustment.
15, 16	SQLO	Squelch threshould level adjustment.
21, 22	T1CON	BPF tuning voltage.

SECTION 5 ADJUSTMENT PROCEDURE

5-1 PREPARATION

■ REQUIRED EQUIPMENTS

EQUIPMENT	GRADE AND RANGE	EQUIPMENT	GRADE AND RANGE
Adjustment software	CS-M36/35 ADJ (Revision 1.0 or later)	JIG cable	• OPC-478 or OPC-478UC • Modified OPC-1668 (See the illust below)
RF power meter (50 Ω terminated)	Measuring range : 0.1–10 W Frequency range : 100–300 MHz SWR : Less than 1.2 : 1	Audio generator (AG)	Frequency range : 300–3000 Hz Output level : 1–500 mV
		Modulation Analyzer	Frequency range : 30–300 MHz Measuring range : 0 to ±10 kHz
Frequency counter	Frequency range : 0.1–300 MHz Frequency accuracy : ±1 ppm or better Input level : Less than 1 mW	AC millivoltmeter	Measuring range : 10 mV to 10 V
Standard signal generator (SSG)	Frequency range : 0.1–300 MHz Output level : 0.1 mV to 32 mV (–127 to –17 dBm)	Attenuator	Power attenuation : 30 dB Capacity : More than 10 W
		Speaker	Impedance : 50 Ω Capacity : More than 1 W

■ JIG CABLE

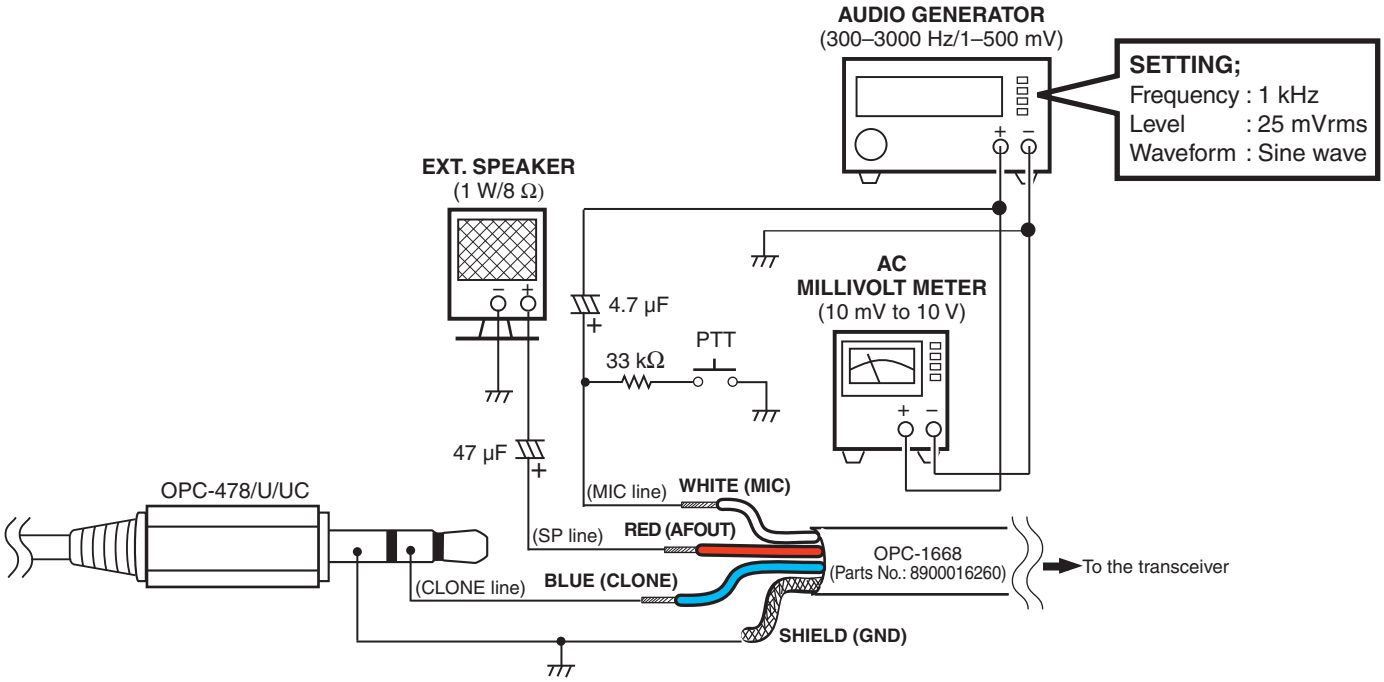

COMMON CONNECTION

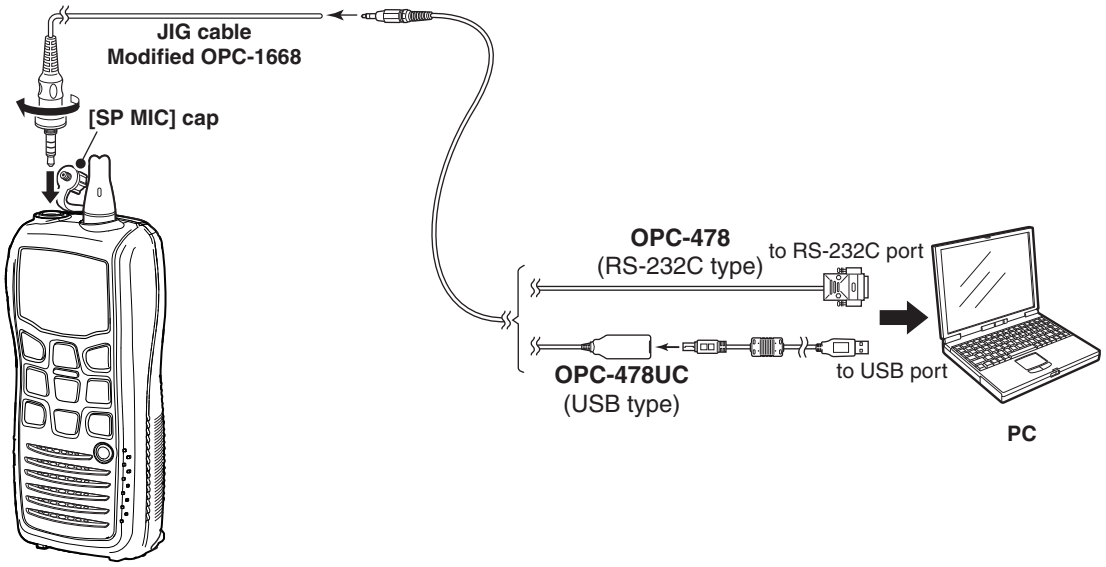

ADJUSTMENT SOFTWARE INSTALLATION

① Quit all applications if Windows is running.
② Insert the CD into the appropriate CD drive.
③ Double-click the "Setup.exe" contained in the 'CS-M36/35 ADJ ' folder in the CD drive.
④ The "Welcome to the InstallShield Wizard for CS-M36/35 ADJ " will appear. Click [Next>].
⑤ The "Choose Destination Location" will appear. Then click [Next>] to install the software to the destination folder. (e.g. C:\Program Files\Icom\CS-M36)
⑥ After the installation is completed, the "InstallShield Wizard Complete" will appear. Then click [Finish].
⑦ Eject the CD.
⑧ Program group 'CS-M36 ADJ' appears in the 'Programs' folder of the start menu, and 'CS-M36/35 ADJ' icon appears on the desk top screen.

ADJUSTMENT SOFTWARE SCREEN

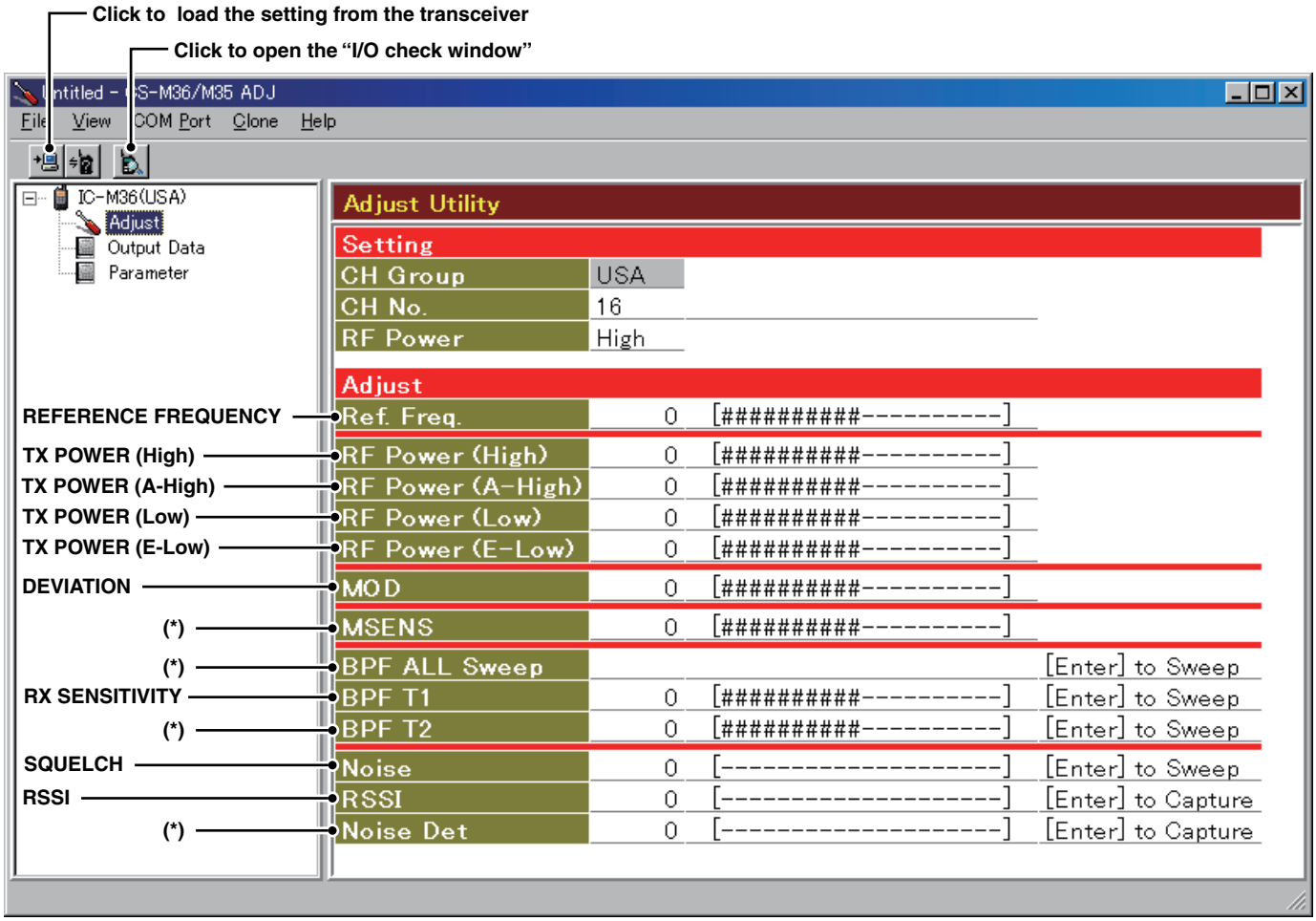

(The values shown in the above screen are example only. Each transceiver has their own values.)

***; NEVER MODIFY**

Microsoft, Windows and Windows Vista are either registered trademarks or trademarks of Microsoft Corporation in the United States and/or other countries.

5-2 FREQUENCY ADJUSTMENTS

Select an adjustment item using [↑] / [↓] keys, then set to the specified value using [←] / [→] keys on the connected PC's keyboard.

ADJUSTMENT		ADJUSTMENT ITEM	TRANSCEIVER'S CONDITION	OPERATION	VALUE
PLL LOCK VOLTAGE (VERIFICATION)	1	**[LVIN] (I/O check window)**	• CH. : 16 • Receiving	1) Connect an RF power meter (or a Dummy load) to the antenna connector. 2) Verify that the lock voltage is in the specified range on the "I/O check window" (see the illust below).	**1.9–2.9 V** (Verify)
	2		• CH. : 16 • TX power : Low • Transmitting		**1.8–2.8 V** (Verify)
REFERENCE FREQUENCY	1	**[Ref. Freq.]**	• CH. : 16 • TX power : Low • Transmitting	1) Connect an RF power meter (or a Dummy load) to the antenna connector. 2) Loose couple a Frequency counter to the antenna connector. 3) Adjust the TX frequency.	**156.8000 MHz**

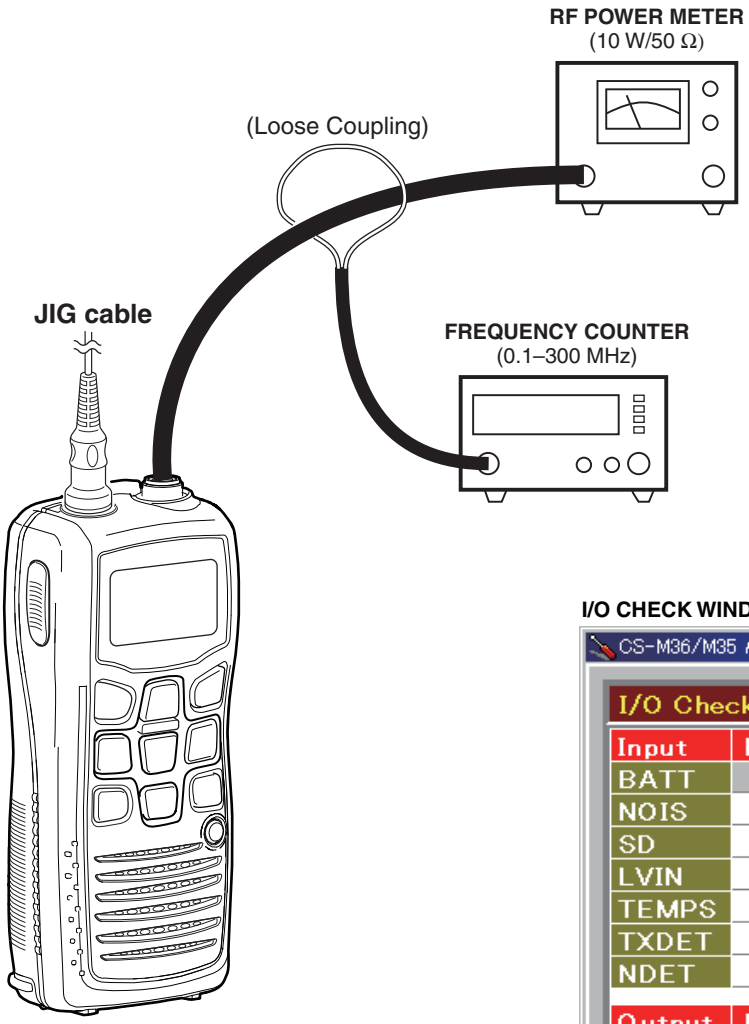

I/O CHECK WINDOW

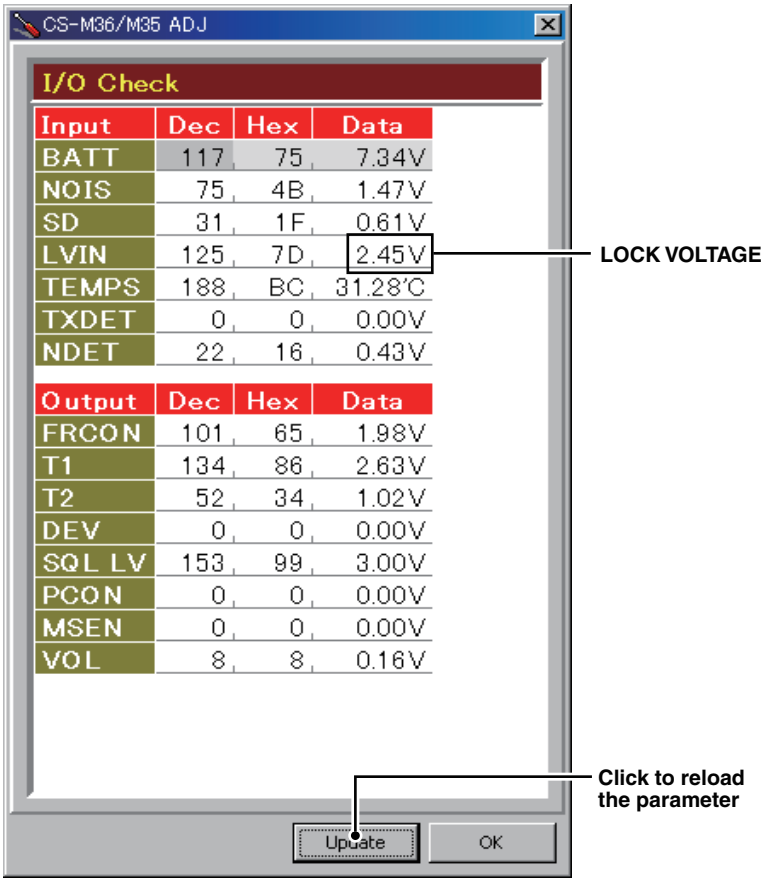

Input	Dec	Hex	Data
BATT	117	75	7.34V
NOIS	75	4B	1.47V
SD	31	1F	0.61V
LVIN	125	7D	2.45V
TEMPS	188	BC	31.28°C
TXDET	0	0	0.00V
NDET	22	16	0.43V

Output	Dec	Hex	Data
FRCON	101	65	1.98V
T1	134	86	2.63V
T2	52	34	1.02V
DEV	0	0	0.00V
SQL LV	153	99	3.00V
PCON	0	0	0.00V
MSEN	0	0	0.00V
VOL	8	8	0.16V

(The values shown in the above screen are example only. Each transceiver has their own values.)

5-3 RECEIVE ADJUSTMENTS

Select an adjustment item using [↑] / [↓] keys, then set to the specified value using [←] / [→] keys on the connected PC's keyboard.

ADJUSTMENT		ADJUSTMENT ITEM	TRANSCEIVER'S CONDITION	OPERATION	VALUE
RX SENSITIVITY	1	**[BPF T1]**	• CH. : 16 • Receiving	1) Connect a Signal genelator to the antenna connector, and set it as specified below. 2) Push the [ENTER] key of the PC.	**(Automatic adjustment)**
SQUELCH	**NOTE:** "**RX SENSITIVITY**" **MUST BE** adjusted before "**SQUELCH**." Otherwise, "**SQUELCH**" is **NOT** adjusted properly. Still more, when "**RX SENSITIVITY**" is adjusted, "**SQUELCH**." **MUST BE** re-adjusted too.				
	1	**[Noise]**	• CH. : 16 • Receiving	1) Connect a Signal genelator to the antenna connector, and set it as specified as below. 2) Push the [ENTER] key of the PC.	**(Automatic adjustment)**
RSSI	**NOTE:** "**RX SENSITIVITY**" **MUST BE** adjusted before "**RSSI**." Otherwise, "**RSSI**" will **NOT** be adjusted properly. Still more, when "**RX SENSITIVITY**" is adjusted, "**RSSI**" MUST BE re-adjusted too.				
	1	**[RSSI]**	• CH. : 16 • Receiving	1) Connect a Signal genelator to the antenna connector, and set it as specified as below. 2) Push the [ENTER] key of the PC.	**(Automatic adjustment)**

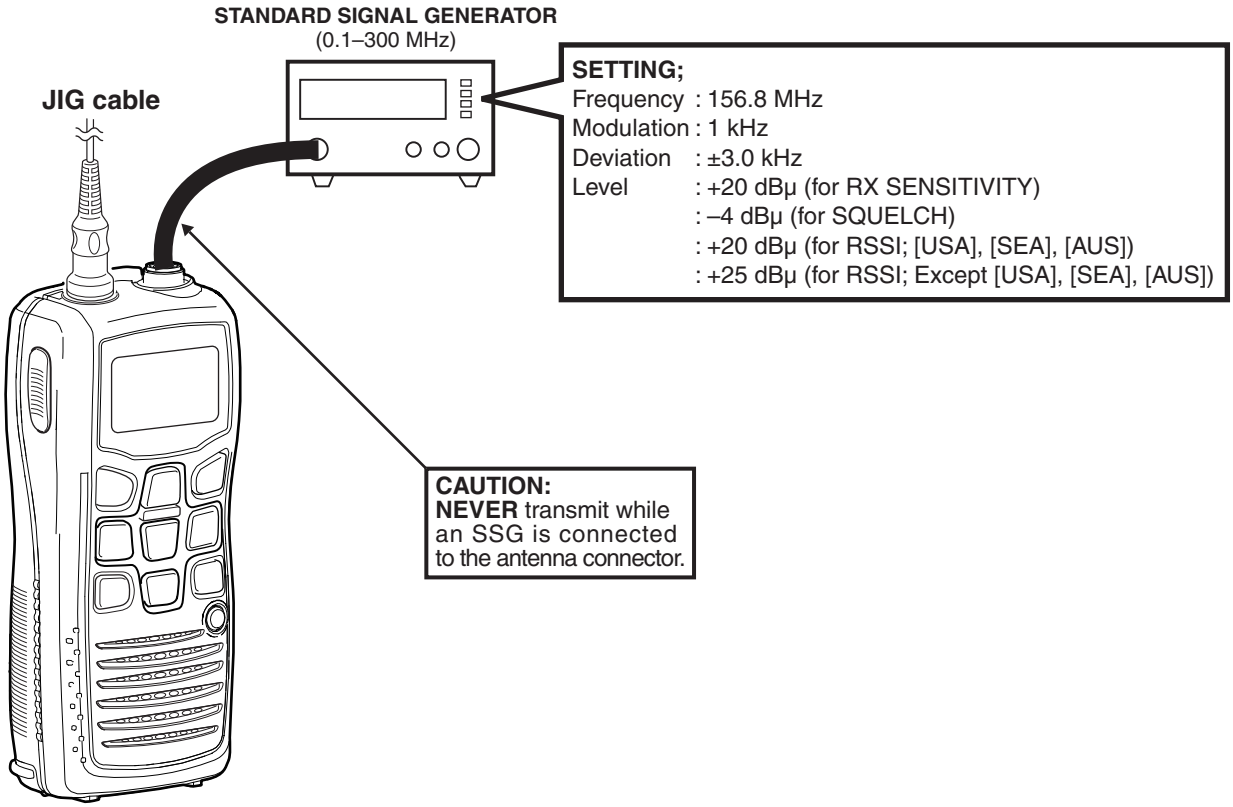

5-4 TRANSMIT ADJUSTMENTS

Select an adjustment item using [↑] / [↓] keys, then set to the specified value using [←] / [→] keys on the connected PC's keyboard.

ADJUSTMENT		ADJUSTMENT ITEM	TRANSCEIVER'S CONDITION	OPERATION	VALUE
TX POWER -High power- (Using BP-250)	1	**[RF Power (High)]**	• CH. : 16 • TX power : High • Transmitting	1) Connect an RF power meter to the antenna connector. 2) Adjust the TX power.	**5.6 W** Except [AUS] **4.7 W** [AUS]
(Using BP-251; With alkaline batteries)	1	**[RF Power (A_High)]**	• CH. : 16 • TX power : High • Transmitting		**2.0 W**
-Low power- (Except [FRG])	2	**[RF Power (Low)]**	• CH. : 16 • TX power : Low • Transmitting		**0.75 W**
(For [FRG])	2	**[RF Power (E-Low)]**	• CH. : 16 • TX power : Low • Transmitting		**0.45 W**

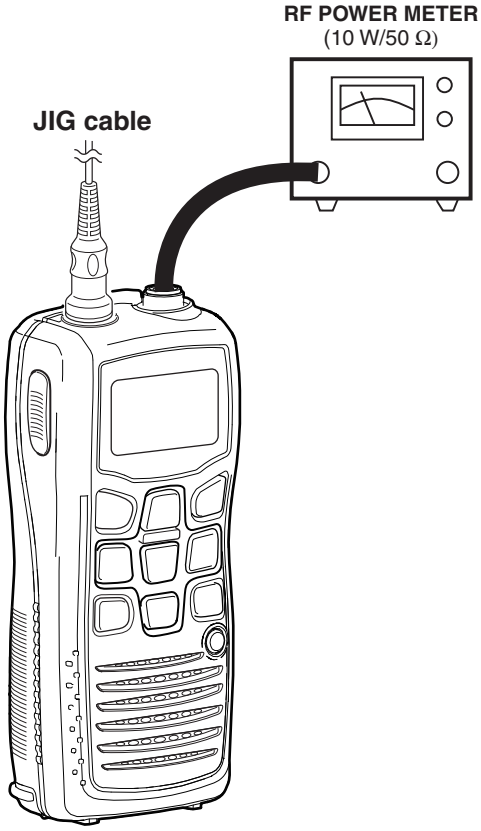

5-4 TRANSMIT ADJUSTMENTS (continued)

Select an adjustment item using [↑] / [↓] keys, then set to the specified value using [←] / [→] keys on the connected PC's keyboard.

ADJUSTMENT		ADJUSTMENT ITEM	TRANSCEIVER'S CONDITION	OPERATION	VALUE
DEVIATION	1	**[MOD]**	• CH. : 16 • TX power : Low • Transmitting	1) Connect a Modulation analyzer to the antenna connector through an Attenuator. 2) Apply specified audio signals through the JIG cable. (see the illust below). 3) Adjust the deviation.	**±4.30 to ±4.40 kHz**

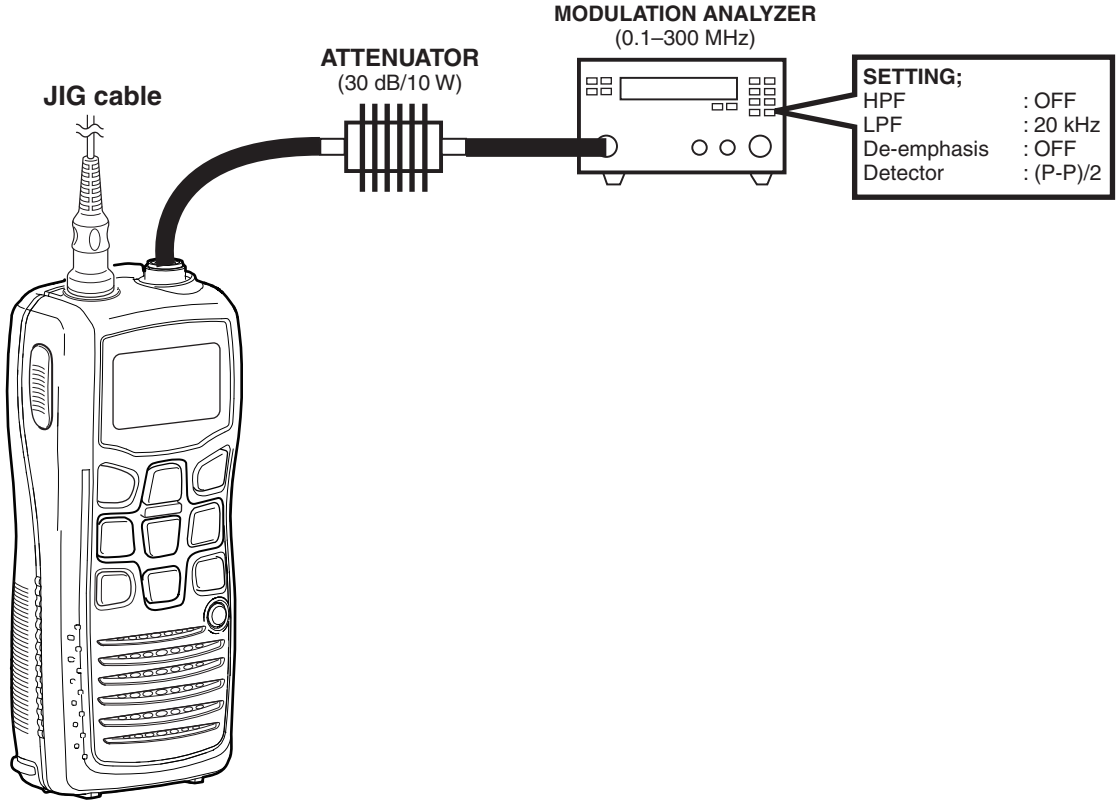

■ JIG CABLE

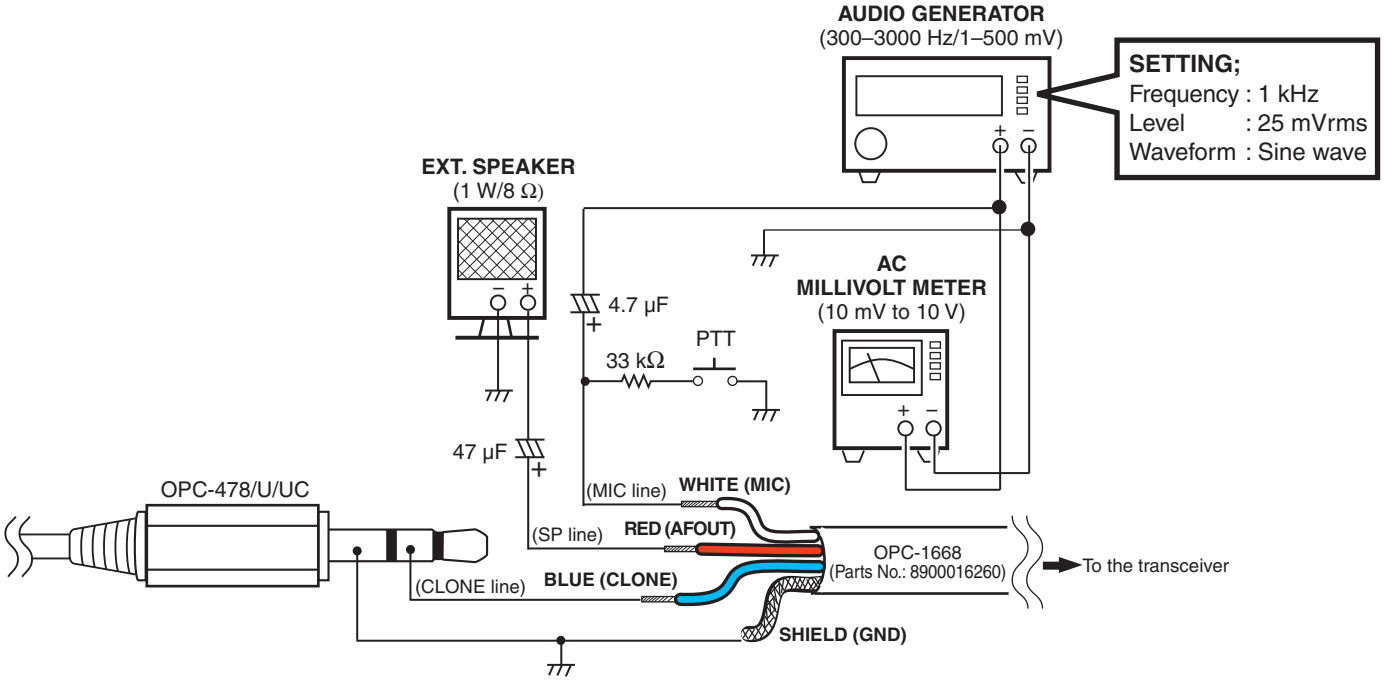

SECTION 6 PARTS LIST

[MAIN UNIT]

REF NO.	PARTS NO.	DESCRIPTION		M.	H/V LOCATION
IC1	1130011671	S.IC MB15E03SLPFV1-G-ER-6E1		B	36.2/11.8
IC2	1180002690	S.REG S-812C36AMC-C2Q-T2G		B	32.9/17.4
IC50	1120002830	S.IC NJM2125F-TE1-#FZZB		T	94.9/15.9
IC170	1110003201	S.IC TA31136FNG(EL)		B	11.5/15.3
IC190	1190001350	S.IC M62364FP 600D		B	20.2/41.1
IC200	1110006350	S.IC LM2902PWR		B	12.6/29.7
IC220	1110005350	S.IC NJM2870F05-TE1-#FZZB		B	96.8/20.7
IC260	1130011770	S.IC CD4066BPWR		B	10.6/40
IC340	1130012430	S.IC S-24CS64A0I-T8T1G		B	96.8/26.3
IC341	1110005771	S.IC S-80942CNMC-G9CT2G		B	97.2/34.6
IC360	1140014940	S.IC uPD78F0338GC-9EB-A		T	95.7/30
IC362	1110002420	S.IC NJM2073M-TE1-#ZZZB		B	49.1/44.7
IC363	1110006380	S.IC LM2904PWR		B	71.1/39.9
IC364	1130007111	S.IC TC7W04FU(TE12L,F)		B	85.9/26
Q3	1560000811	S.FET 2SK1069-4-TL-E		B	32.1/6.3
Q20	1590003790	S.TRA KRC404E RTK/P		B	50.1/12.4
Q21	1530004011	S.TRA KTC3770U-C-RTK/P		B	54.4/11.4
Q22	1530004011	S.TRA KTC3770U-C-RTK/P		B	57.1/8
Q23	1530002381	S.TRA 2SC4215-Y(TE85L,F)		B	52.8/16.8
Q24	1530002381	S.TRA 2SC4215-Y(TE85L,F)		B	56.8/18.6
Q25	1530002381	S.TRA 2SC4215-Y(TE85L,F)		B	48.5/18.7
Q50	1530004011	S.TRA KTC3770U-C-RTK/P		B	63.8/9.8
Q53	1560001241	S.FET RD01MUS1-T113		B	68.7/8.5
Q54	1560001630	S.FET RD09MUP2-T102		B	75.6/9.9
Q90	1580000751	S.FET 3SK294(TE85L,F)		B	69.3/22.4
Q150	1580000731	S.FET 3SK293(TE85L,F)		B	61.8/24.8
Q151	1530003890	S.TRA KTC3880S Y-RTK/P		T	20.4/14.4
Q220	1510001090	S.TRA KTA2015Y-RTK/P		B	61.4/37.7
Q221	1510001090	S.TRA KTA2015Y-RTK/P		B	63.9/37.7
Q222	1510001090	S.TRA KTA2015Y-RTK/P		B	66.4/37.7
Q224	1590003800	S.TRA KTC811U-GR-RTK/P		B	58.8/41.4
Q225	1520000840	S.TRA KTA1664Y-RTF/P		B	63.3/41.6
Q230	1550000090	S.FET RSQ035P03TR		B	48.6/36.6
Q231	1590003800	S.TRA KTC811U-GR-RTK/P		B	52.7/36.5
Q240	1590003790	S.TRA KRC404E RTK/P		T	88.9/20.1
Q250	1590003770	S.TRA KRA302E-RTK/P		B	77.8/42.9
Q251	1590003770	S.TRA KRA302E-RTK/P		B	77.8/44.9
Q350	1530002691	S.TRA 2SC4116-GR(TE85R,F)		B	85.6/34.1
Q351	1590003780	S.TRA KRA304E-RTK/P		T	97.7/14.4
Q352	1590003790	S.TRA KRC404E RTK/P		T	87.6/39.5
Q353	1550000090	S.FET RSQ035P03TR		B	107.7/28.7
Q354	1590003790	S.TRA KRC404E RTK/P		B	104.6/30.8
Q355	1590003790	S.TRA KRC404E RTK/P		B	105/32.9
Q356	1590003780	S.TRA KRA304E-RTK/P		B	107.1/32.4
Q357	1590003790	S.TRA KRC404E RTK/P		T	88.4/16.8
Q358	1590003790	S.TRA KRC404E RTK/P		B	53.7/39.6
Q360	1590003790	S.TRA KRC404E RTK/P		B	22.5/10
Q361	1510000771	S.TRA 2SA1586-GR(TE85L,F)		B	86.5/29.9
Q362	1590003790	S.TRA KRC404E RTK/P		B	75.6/41.2
D1	1750000771	S.VAR HVC376BTRF-E		B	28.3/17.5
D3	1750001340	S.DIO KDS160E RTK/P		B	25.1/10
D20	1790001260	S.DIO MA2S077-(TX)	[USA]	B	47.6/10.9
	1790001260	S.DIO MA2S077-(TX)	[SEA]		
	1790001261	S.DIO MA2S077G0L	[CHN]		
	1790001261	S.DIO MA2S077G0L	[EUR-1]		
	1790001261	S.DIO MA2S077G0L	[EUR]		
	1790001261	S.DIO MA2S077G0L	[UK]		
	1790001261	S.DIO MA2S077G0L	[FRG]		
	1790001261	S.DIO MA2S077G0L	[HOL]		
	1790001260	S.DIO MA2S077-(TX)	[AUS]		
D21	1790001260	S.DIO MA2S077-(TX)	[USA]	B	47.8/12.9
	1790001260	S.DIO MA2S077-(TX)	[SEA]		
	1790001261	S.DIO MA2S077G0L	[CHN]		
	1790001261	S.DIO MA2S077G0L	[EUR-1]		
	1790001261	S.DIO MA2S077G0L	[EUR]		
	1790001261	S.DIO MA2S077G0L	[UK]		
	1790001261	S.DIO MA2S077G0L	[FRG]		
	1790001261	S.DIO MA2S077G0L	[HOL]		
	1790001260	S.DIO MA2S077-(TX)	[AUS]		
D22	1750000711	S.VAR HVC350BTRF-E		B	53/7.8
D23	1750000711	S.VAR HVC350BTRF-E		B	54.2/7.8
D50	1750001310	S.DIO KDS114 RTK/PA		B	64/15.5
D51	1750001310	S.DIO KDS114 RTK/PA		B	63.4/17.9
D52	1750000581	S.DIO 1SV307(TPH3,F)		B	96.3/6.8
D90	1750001310	S.DIO KDS114 RTK/PA		B	92.1/15.2
D91	1790001670	S.DIO RB706F-40T106		B	87.9/11.7
D92	1750001190	S.VAR KDV214E RTK/P		B	80.8/23.2
D93	1750001190	S.VAR KDV214E RTK/P		B	76.6/24.2
D130	1750001190	S.VAR KDV214E RTK/P		B	66.8/25.8
D131	1750001190	S.VAR KDV214E RTK/P		B	64.6/25.7
D350	1750000550	S.DIO 1SS355 TE-17		B	88/34.7
D353	1790001240	S.DIO MA2S728-(TX)	[USA]	B	85.5/14.8
	1790001240	S.DIO MA2S728-(TX)	[SEA]		
	1790001241	S.DIO MA2S7280GL	[CHN]		
	1790001241	S.DIO MA2S7280GL	[EUR-1]		
	1790001241	S.DIO MA2S7280GL	[EUR]		
	1790001241	S.DIO MA2S7280GL	[UK]		
	1790001241	S.DIO MA2S7280GL	[FRG]		
	1790001241	S.DIO MA2S7280GL	[HOL]		
	1790001240	S.DIO MA2S728-(TX)	[AUS]		
D354	1750001340	S.DIO KDS160E RTK/P		B	72.2/35.3
D355	1750001340	S.DIO KDS160E RTK/P		B	99.4/29.3

[MAIN UNIT]

REF NO.	PARTS NO.	DESCRIPTION	M.	H/V LOCATION
FI150	2030000350	MON 21R15AB (FL-368)		
FI151	2030000481	MON 21R15AB (FL-399A)		
FI170	2020002410	CER LTM450FW <JJE>		
X1	6050011740	S.XTA CR-766 TSS-6035B 21.250 MHz	B	28.7/12.6
X170	6070000300	S.DIS JTBM450CX24 <JJE>	B	17.7/8.5
X360	6050012460	S.XTA CR-834(SMD-49/7.9872 MHz)	B	91.5/32.2
L1	6200009141	S.COI NLV25T-6R8J	T	17.5/8.5
L20	6200011021	S.COI ELJRF 82NJFB	B	45.8/18.5
L21	6200003711	S.COI NLV25T-2R7J	B	46.4/7.7
L22	6200011410	S.COI C2520C-82NG-A	B	50.7/9
L23	6200011031	S.COI ELJRF R10JFB	B	54.7/16.2
L24	6200011031	S.COI ELJRF R10JFB	B	54.7/18
L25	6200011031	S.COI ELJRF R10JFB	B	48.3/16.8
L26	6200007001	S.COI ELJRE 82NGFA	B	61.2/19.5
L50	6200006981	S.COI ELJRE R10GFA	B	65.4/11.7
L51	6200007001	S.COI ELJRE 82NGFA	B	64/6.9
L53	6200007690	S.COI LQW2BHN18NJ03L	B	70.6/13.7
L55	6200012750	S.COI 0.20-1.0-7TL 25N <COMO>	B	80.6/10.7
L56	6200012570	S.COI 0.26-1.0-3TL 6.8N <COMO>	B	81.2/8.1
L57	6200012680	S.COI 0.30-1.3-5TL 20N <COMO>	B	85/8.1
L58	6200003711	S.COI NLV25T-2R7J	B	94.3/9.2
L80	6200012470	S.COI 0.30-1.7-7TL 45.3N <COMO>	B	91.1/7.7
L81	6200012770	S.COI 0.26-1.1-7TR 24N <COMO>	B	101/8.6
L82	6200012780	S.COI 0.30-1.4-6TL 27.2N <COMO>	B	104.4/11.4
L90	6200012470	S.COI 0.30-1.7-7TL 45.3N <COMO>	B	97.9/12.6
L92	6200007750	S.COI LQW2BHN56NJ03L	B	79.9/21
L93	6200007750	S.COI LQW2BHN56NJ03L	B	76/19.5
L96	6200007750	S.COI LQW2BHN56NJ03L	B	68.5/25.7
L97	6200007750	S.COI LQW2BHN56NJ03L	B	64.4/21.5
L98	6200003680	S.COI LQH31MNR82M03L	B	58.3/24.9
R1	7510001661	S.THR NTCG16 4LH 473JT	B	36.8/17.7
R2	7030003940	S.RES ERJ3GEYF 104 V (100K)	B	39.4/17.7
R3	7030005050	S.RES ERJ2GEJ 103 X (10K)	B	29.6/19.7
R4	7030005240	S.RES ERJ2GEJ 473 X (47K)	B	30/18.4
R5	7030007280	S.RES ERJ2GEJ 331 X (330)	B	30.4/8.8
R6	7030005120	S.RES ERJ2GEJ 102 X (1K)	B	45.8/12.2
R7	7030005240	S.RES ERJ2GEJ 473 X (47K)	B	48.7/11.2
R8	7030005010	S.RES ERJ2GEJ 681 X (680)	B	35.7/8.2
R10	7030005000	S.RES ERJ2GEJ 471 X (470)	B	36.9/7.8
R11	7030005120	S.RES ERJ2GEJ 102 X (1K)	B	29.7/7
R12	7030005050	S.RES ERJ2GEJ 103 X (10K)	B	34.4/6.5
R13	7030005210	S.RES ERJ2GEJ 822 X (8.2K)	B	31.3/4.3
R20	7030004980	S.RES ERJ2GEJ 101 X (100)	B	46.8/17
R22	7030009290	S.RES ERJ2GEJ 562 X (5.6K)	B	39.1/7.9
R23	7030005120	S.RES ERJ2GEJ 102 X (1K)	B	48.6/9.3
R24	7030005090	S.RES ERJ2GEJ 104 X (100K)	B	47.9/14.3
R25	7030005090	S.RES ERJ2GEJ 104 X (100K)	B	47/14.3
R26	7030008010	S.RES ERJ2GEJ 123 X (12K)	B	54.9/13.2
R27	7030008010	S.RES ERJ2GEJ 123 X (12K)	B	57.5/9.9
R28	7030009160	S.RES ERJ2GEJ 181 X (180)	B	55.7/9.6
R29	7030005000	S.RES ERJ2GEJ 471 X (470)	B	54.9/14.1
R30	7030005070	S.RES ERJ2GEJ 683 X (68K)	B	53.1/14.1
R31	7030005010	S.RES ERJ2GEJ 681 X (680)	B	54.9/15
R32	7030005000	S.RES ERJ2GEJ 471 X (470)	B	55.9/16.2
R33	7030007350	S.RES ERJ2GEJ 393 X (39K)	B	55/19.3
R34	7030005000	S.RES ERJ2GEJ 471 X (470)	B	49.7/17
R35	7030005070	S.RES ERJ2GEJ 683 X (68K)	B	50.3/18.6
R36	7030005120	S.RES ERJ2GEJ 102 X (1K)	B	50/14.9
R37	7030007270	S.RES ERJ2GEJ 151 X (150)	B	32.4/15.2
R38	7030005050	S.RES ERJ2GEJ 103 X (10K)	B	25.1/7.9
R39	7030005050	S.RES ERJ2GEJ 103 X (10K)	B	41.5/12.8
R40	7030005220	S.RES ERJ2GEJ 223 X (22K)	B	41.1/10.7
R41	7030005050	S.RES ERJ2GEJ 103 X (10K)	B	40.6/12.8
R42	7030005220	S.RES ERJ2GEJ 223 X (22K)	B	41.1/11.6
R43	7030005050	S.RES ERJ2GEJ 103 X (10K)	B	40.9/15.3
R44	7030005220	S.RES ERJ2GEJ 223 X (22K)	B	41.8/15.3
R45	7030005050	S.RES ERJ2GEJ 103 X (10K)	B	40/15.3
R46	7030005220	S.RES ERJ2GEJ 223 X (22K)	B	39.1/15.3
R47	7030008410	S.RES ERJ2GEJ 392 X (3.9K)	T	21.8/8.9
R50	7030005120	S.RES ERJ2GEJ 102 X (1K)	B	62.6/16.1
R52	7030005040	S.RES ERJ2GEJ 472 X (4.7K)	B	65.7/15
R53	7030004980	S.RES ERJ2GEJ 101 X (100)	B	66.4/13.8
R54	7030005530	S.RES ERJ2GEJ 100 X (10)	B	65.5/13.8
R55	7030007300	S.RES ERJ2GEJ 332 X (3.3K)	B	63.9/11.6
R56	7030007570	S.RES ERJ2GEJ 122 X (1.2K)	B	61.5/8.9
R57	7030005570	S.RES ERJ2GEJ 820 X (82)	B	61.5/9.8
R65	7030005100	S.RES ERJ2GEJ 154 X (150K)	T	90.8/17.6
R66	7030007350	S.RES ERJ2GEJ 393 X (39K)	T	92.7/16.6
R67	7030005090	S.RES ERJ2GEJ 104 X (100K)	T	92.7/14.5
R68	7030004980	S.RES ERJ2GEJ 101 X (100)	T	91.8/12.9
R69	7030007340	S.RES ERJ2GEJ 153 X (15K)	B	66.8/4.9
R70	7030007340	S.RES ERJ2GEJ 153 X (15K)	B	64.9/5
R71	7030004980	S.RES ERJ2GEJ 101 X (100)	B	65.8/6.1
R72	7030005710	S.RES ERJ2GEJ 121 X (120)	B	72.1/13.9
R73	7030005120	S.RES ERJ2GEJ 102 X (1K)	B	68.8/4.9
R74	7030005050	S.RES ERJ2GEJ 103 X (10K)	B	70.1/5.3
R75	7030004980	S.RES ERJ2GEJ 101 X (100)	B	71.9/6.9
R76	7030000280	S.RES MCR10EZHJ 150 (151)	B	93.5/11.8
R80	7030003670	S.RES ERJ3GEYJ 823 V (82K)	B	107/11.2
R83	7030005090	S.RES ERJ2GEJ 104 X (100K)	T	86.9/14.6

M.=Mounted side (T: Mounted on the Top side, B: Mounted on the Bottom side)
S.=Surface mount

[MAIN UNIT]

REF NO.	PARTS NO.	DESCRIPTION			M.	H/V LOCATION
R90	7030005590	S.RES	ERJ2GEJ 680 X (68)	[CHN]	B	88.8/15.4
	7030005590	S.RES	ERJ2GEJ 680 X (68)	[EUR-1]		
	7030005590	S.RES	ERJ2GEJ 680 X (68)	[EUR]		
	7030005590	S.RES	ERJ2GEJ 680 X (68)	[UK]		
	7030005590	S.RES	ERJ2GEJ 680 X (68)	[FRG]		
	7030005590	S.RES	ERJ2GEJ 680 X (68)	[HOL]		
R91	7030005110	S.RES	ERJ2GEJ 224 X (220K)		B	79.8/24.6
R93	7030005050	S.RES	ERJ2GEJ 103 X (10K)		B	80.7/25.6
R94	7030005110	S.RES	ERJ2GEJ 224 X (220K)		B	75.5/25.2
R95	7030005090	S.RES	ERJ2GEJ 104 X (100K)		B	71.6/22.8
R96	7030005700	S.RES	ERJ2GEJ 274 X (270K)		B	70.4/20.2
R97	7030004990	S.RES	ERJ2GEJ 221 X (220)		B	70.9/26.5
R100	7030010040	S.RES	ERJ2GEJ-JPW		B	62.7/13.8
R103	7030005050	S.RES	ERJ2GEJ 103 X (10K)		B	72.5/22.8
R104	7030009270	S.RES	ERJ2GEJ 821 X (820)		B	66.4/21.6
R105	7030005110	S.RES	ERJ2GEJ 224 X (220K)		B	66.7/27.9
R107	7030005110	S.RES	ERJ2GEJ 224 X (220K)		B	65.8/27.9
R108	7030010040	S.RES	ERJ2GEJ-JPW		B	62.9/26.8
R109	7030005530	S.RES	ERJ2GEJ 100 X (10)		B	56.7/24.2
R110	7030008400	S.RES	ERJ2GEJ 182 X (1.8K)		B	54.9/25.8
R111	7030005090	S.RES	ERJ2GEJ 104 X (100K)		B	62.3/22.4
R113	7030004980	S.RES	ERJ2GEJ 101 X (100)		B	72.5/24
R115	7030006610	S.RES	ERJ2GEJ 394 X (390K)		B	59.9/24.9
R120	7030007290	S.RES	ERJ2GEJ 222 X (2.2K)		B	62.8/19.3
R121	7030005230	S.RES	ERJ2GEJ 334 X (330K)	[USA]	B	59.9/23.2
	7030005230	S.RES	ERJ2GEJ 334 X (330K)	[SEA]		
	7030006610	S.RES	ERJ2GEJ 394 X (390K)	[CHN]		
	7030006610	S.RES	ERJ2GEJ 394 X (390K)	[EUR-1]		
	7030006610	S.RES	ERJ2GEJ 394 X (390K)	[EUR]		
	7030006610	S.RES	ERJ2GEJ 394 X (390K)	[UK]		
	7030006610	S.RES	ERJ2GEJ 394 X (390K)	[FRG]		
	7030006610	S.RES	ERJ2GEJ 394 X (390K)	[HOL]		
	7030005230	S.RES	ERJ2GEJ 334 X (330K)	[AUS]		
R122	7030005230	S.RES	ERJ2GEJ 334 X (330K)		B	61.1/22.8
R152	7030005120	S.RES	ERJ2GEJ 102 X (1K)		B	30.8/25.8
R153	7030005120	S.RES	ERJ2GEJ 102 X (1K)		T	24.5/13.6
R154	7030005090	S.RES	ERJ2GEJ 104 X (100K)		T	20.2/16.6
R155	7030007290	S.RES	ERJ2GEJ 222 X (2.2K)		T	18.6/16.5
R156	7030005000	S.RES	ERJ2GEJ 471 X (470)		T	18.3/14.7
R170	7030009280	S.RES	ERJ2GEJ 391 X		T	17.3/14.7
R171	7030005120	S.RES	ERJ2GEJ 102 X (1K)		B	16.6/14.8
R172	7030005000	S.RES	ERJ2GEJ 471 X (470)		B	15.4/18.6
R173	7030005030	S.RES	ERJ2GEJ 152 X (1.5K)		T	8.5/13.4
R174	7030005700	S.RES	ERJ2GEJ 274 X (270K)		B	7.2/17.6
R175	7030005600	S.RES	ERJ2GEJ 273 X (27K)		B	8.4/19.3
R176	7030005120	S.RES	ERJ2GEJ 102 X (1K)		B	7.2/19.2
R192	7030009280	S.RES	ERJ2GEJ 391 X		B	37.3/22.5
R193	7030005000	S.RES	ERJ2GEJ 471 X (470)		B	25.2/42.8
R194	7030005090	S.RES	ERJ2GEJ 104 X (100K)		B	37.3/20.3
R201	7030007290	S.RES	ERJ2GEJ 222 X (2.2K)		B	9.6/33.9
R202	7030005090	S.RES	ERJ2GEJ 104 X (100K)		B	11.4/34.5
R203	7030005110	S.RES	ERJ2GEJ 224 X (220K)		B	9.4/32.7
R204	7030005040	S.RES	ERJ2GEJ 472 X (4.7K)		B	9.3/31.1
R205	7030005210	S.RES	ERJ2GEJ 822 X (8.2K)		B	7/27
R206	7030008290	S.RES	ERJ2GEJ 183 X (18K)		B	8.1/30.6
R207	7030005600	S.RES	ERJ2GEJ 273 X (27K)		B	8.1/31.5
R212	7030005030	S.RES	ERJ2GEJ 152 X (1.5K)		B	8.2/25.7
R213	7030005070	S.RES	ERJ2GEJ 683 X (68K)		B	7.6/24.5
R214	7030007340	S.RES	ERJ2GEJ 153 X (15K)		B	8.8/22.3
R220	7030005240	S.RES	ERJ2GEJ 473 X (47K)		B	60.9/35.8
R221	7030005050	S.RES	ERJ2GEJ 103 X (10K)		B	62/34.6
R222	7030005240	S.RES	ERJ2GEJ 473 X (47K)		B	64.2/35.8
R223	7030005050	S.RES	ERJ2GEJ 103 X (10K)		B	64.6/33.7
R224	7030005240	S.RES	ERJ2GEJ 473 X (47K)		B	66.3/35.8
R225	7030005050	S.RES	ERJ2GEJ 103 X (10K)		B	67.4/34.6
R226	7030005040	S.RES	ERJ2GEJ 472 X (4.7K)		B	56.5/40.6
R227	7030005050	S.RES	ERJ2GEJ 103 X (10K)		B	59.8/43.1
R228	7030005220	S.RES	ERJ2GEJ 223 X (22K)		B	58.1/43.1
R230	7030005600	S.RES	ERJ2GEJ 273 X (27K)		B	52.9/33.9
R231	7030005160	S.RES	ERJ2GEJ 105 X (1M)		B	52.5/32.7
R235	7030005930	S.RES	ERJ3GEYF 334 V (330K)		B	62.2/45.4
R236	7030008090	S.RES	ERJ3EKF 1503 V (150K)		B	60.9/46.9
R240	7030004990	S.RES	ERJ2GEJ 221 X (220)		T	91.1/19.4
R241	7030005010	S.RES	ERJ2GEJ 681 X (680)		T	90.6/20.6
R242	7030005010	S.RES	ERJ2GEJ 681 X (680)		T	91.5/20.6
R245	7030005120	S.RES	ERJ2GEJ 102 X (1K)		T	101.2/22.1
R250	7030005090	S.RES	ERJ2GEJ 104 X (100K)		B	79.9/42.5
R251	7030008280	S.RES	ERJ2GEJ 271 X (270)		B	75.3/44.1
R252	7030005060	S.RES	ERJ2GEJ 333 X (33K)		B	30.2/45.3
R253	7030009290	S.RES	ERJ2GEJ 562 X (5.6K)		B	15.4/32.9
R255	7030005170	S.RES	ERJ2GEJ 474 X (470K)		B	14.2/34.1
R256	7030007340	S.RES	ERJ2GEJ 153 X (15K)		B	12.3/34.4
R257	7030005040	S.RES	ERJ2GEJ 472 X (4.7K)		B	15.8/34.1
R258	7030005040	S.RES	ERJ2GEJ 472 X (4.7K)		B	14.1/35.3
R260	7030005310	S.RES	ERJ2GEJ 124 X (120K)		B	16.8/31.9
R261	7030007350	S.RES	ERJ2GEJ 393 X (39K)		B	15.9/31.3
R262	7030008290	S.RES	ERJ2GEJ 183 X (18K)		B	17.2/33.7
R263	7030005090	S.RES	ERJ2GEJ 104 X (100K)		B	11.2/35.7
R264	7030005090	S.RES	ERJ2GEJ 104 X (100K)		B	12.3/44.3
R265	7030005090	S.RES	ERJ2GEJ 104 X (100K)		B	6.9/38.8
R270	7030005050	S.RES	ERJ2GEJ 103 X (10K)		B	28.5/45.3
R271	7030005060	S.RES	ERJ2GEJ 333 X (33K)		B	14.9/22.9
R272	7030005310	S.RES	ERJ2GEJ 124 X (120K)		B	14.5/24.1
R273	7030005220	S.RES	ERJ2GEJ 223 X (22K)		B	13.6/24.1
R274	7030006610	S.RES	ERJ2GEJ 394 X (390K)		B	11.5/22.7
R275	7030005050	S.RES	ERJ2GEJ 103 X (10K)		B	10.3/23
R276	7030008300	S.RES	ERJ2GEJ 184 X (180K)		B	12.7/24.1
R277	7030005090	S.RES	ERJ2GEJ 104 X (100K)		B	11.5/24.5
R278	7030005120	S.RES	ERJ2GEJ 102 X (1K)		B	15.7/26.3
R279	7030005030	S.RES	ERJ2GEJ 152 X (1.5K)		B	15.7/25.4
R284	7030005530	S.RES	ERJ2GEJ 100 X (10)		B	44.6/45.7
R286	7030005050	S.RES	ERJ2GEJ 103 X (10K)		B	49.5/40.2
R288	7030005110	S.RES	ERJ2GEJ 224 X (220K)		B	50.1/39
R289	7030005050	S.RES	ERJ2GEJ 103 X (10K)		B	51.7/38.7

[MAIN UNIT]

REF NO.	PARTS NO.	DESCRIPTION			M.	H/V LOCATION
R300	7030005290	S.RES	ERJ2GEJ 682 X (6.8K)		B	7.5/28.2
R340	7030005090	S.RES	ERJ2GEJ 104 X (100K)		B	99/30.4
R341	7030005050	S.RES	ERJ2GEJ 103 X (10K)		B	98/31.8
R343	7030005050	S.RES	ERJ2GEJ 103 X (10K)		B	99.4/35.2
R346	7030005090	S.RES	ERJ2GEJ 104 X (100K)		B	86.3/35.9
R351	7030005060	S.RES	ERJ2GEJ 333 X (33K)		B	87/32.8
R352	7030005290	S.RES	ERJ2GEJ 682 X (6.8K)		B	87.9/31.9
R353	7030005240	S.RES	ERJ2GEJ 473 X (47K)		B	84.8/29
R361	7030005120	S.RES	ERJ2GEJ 102 X (1K)		T	105.4/34.9
R363	7030005120	S.RES	ERJ2GEJ 102 X (1K)		T	105.1/34
R364	7030005050	S.RES	ERJ2GEJ 103 X (10K)		T	106/33.1
R367	7030010040	S.RES	ERJ2GEJ-JPW	[SEA]	T	106.3/25.7
	7030010040	S.RES	ERJ2GEJ-JPW	[FRG]		
	7030010040	S.RES	ERJ2GEJ-JPW	[AUS]		
R371	7030005170	S.RES	ERJ2GEJ 474 X (470K)		T	87.5/37.9
R372	7030007310	S.RES	ERJ2GEJ 155 X (1.5M)		T	87.5/37
R373	7030005160	S.RES	ERJ2GEJ 105 X (1M)		T	87.6/36.1
R374	7030006610	S.RES	ERJ2GEJ 394 X (390K)		T	88.8/36.5
R376	7030005090	S.RES	ERJ2GEJ 104 X (100K)		B	8.5/32.7
R377	7030005080	S.RES	ERJ2GEJ 823 X (82K)		B	8.8/29.4
R378	7030005080	S.RES	ERJ2GEJ 823 X (82K)		B	9.1/27.3
R379	7030005080	S.RES	ERJ2GEJ 823 X (82K)		B	10.6/25.4
R380	7030003560	S.RES	ERJ3GEYJ 103 V (10K)		B	89.8/11.8
R381	7030005050	S.RES	ERJ2GEJ 103 X (10K)		T	90.5/14.6
R382	7030009140	S.RES	ERJ2GEJ 272 X (2.7K)		T	88.1/14.6
R383	7030008010	S.RES	ERJ2GEJ 123 X (12K)		T	89.3/14.2
R384	7030007290	S.RES	ERJ2GEJ 222 X (2.2K)		T	95.7/13.7
R386	7030005050	S.RES	ERJ2GEJ 103 X (10K)		T	99.5/15.2
R387	7030005090	S.RES	ERJ2GEJ 104 X (100K)		B	79.8/45.2
R388	7030005170	S.RES	ERJ2GEJ 474 X (470K)		B	13.2/35.3
R390	7030005090	S.RES	ERJ2GEJ 104 X (100K)		B	7.1/37.9
R391	7030005240	S.RES	ERJ2GEJ 473 X (47K)		B	9.4/24.5
R392	7030010040	S.RES	ERJ2GEJ-JPW		B	16.2/19.5
R395	7030005090	S.RES	ERJ2GEJ 104 X (100K)		B	88.1/28.2
R396	7030005050	S.RES	ERJ2GEJ 103 X (10K)		B	89.4/38.7
R397	7030005700	S.RES	ERJ2GEJ 274 X (270K)		B	108.2/30.9
R398	7030005050	S.RES	ERJ2GEJ 103 X (10K)		B	106.6/30.9
R399	7030005230	S.RES	ERJ2GEJ 334 X (330K)		B	103.2/32.6
R400	7030005100	S.RES	ERJ2GEJ 154 X (150K)		B	103.2/33.5
R401	7030005070	S.RES	ERJ2GEJ 683 X (68K)		T	90.4/16.4
R402	7030005090	S.RES	ERJ2GEJ 104 X (100K)		B	50.4/40.2
R427	7030008280	S.RES	ERJ2GEJ 271 X (270)		B	51.3/40.9
R428	7030007340	S.RES	ERJ2GEJ 153 X (15K)		B	52.5/41
R429	7030005530	S.RES	ERJ2GEJ 100 X (10)		B	44.8/40.6
R430	7030005700	S.RES	ERJ2GEJ 274 X (270K)		B	50.8/35.9
R431	7030005050	S.RES	ERJ2GEJ 103 X (10K)		B	50.8/37.5
R432	7030005060	S.RES	ERJ2GEJ 333 X (33K)		B	75.3/38.8
R433	7030005050	S.RES	ERJ2GEJ 103 X (10K)		B	76.2/43.4
R434	7030005220	S.RES	ERJ2GEJ 223 X (22K)		B	75.3/39.7
R435	7030005030	S.RES	ERJ2GEJ 152 X (1.5K)		B	73.8/40.9
R437	7030005040	S.RES	ERJ2GEJ 472 X (4.7K)		B	73.2/43.7
R438	7030005090	S.RES	ERJ2GEJ 104 X (100K)		B	70.4/44.2
R439	7030005100	S.RES	ERJ2GEJ 154 X (150K)		B	73.2/36.9
R440	7030005040	S.RES	ERJ2GEJ 472 X (4.7K)		B	69.5/46.5
R441	7030007340	S.RES	ERJ2GEJ 153 X (15K)		B	68.6/46.5
R442	7030008400	S.RES	ERJ2GEJ 182 X (1.8K)		B	68.5/41.1
R443	7030005090	S.RES	ERJ2GEJ 104 X (100K)		B	68.7/39.9
R444	7030005220	S.RES	ERJ2GEJ 223 X (22K)		B	70.1/35.6
R445	7030007310	S.RES	ERJ2GEJ 155 X (1.5M)		B	74.7/36.3
R446	7030005230	S.RES	ERJ2GEJ 334 X (330K)		B	68.5/42.9
R447	7030010040	S.RES	ERJ2GEJ-JPW	[SEA]	T	106.3/26.6
	7030010040	S.RES	ERJ2GEJ-JPW	[CHN]		
	7030010040	S.RES	ERJ2GEJ-JPW	[EUR-1]		
	7030010040	S.RES	ERJ2GEJ-JPW	[EUR]		
	7030010040	S.RES	ERJ2GEJ-JPW	[HOL]		
R448	7030010040	S.RES	ERJ2GEJ-JPW	[UK]	T	106.6/27.5
	7030010040	S.RES	ERJ2GEJ-JPW	[HOL]		
	7030010040	S.RES	ERJ2GEJ-JPW	[AUS]		
R449	7030008290	S.RES	ERJ2GEJ 183 X (18K)		B	84.6/31.2
R450	7030005040	S.RES	ERJ2GEJ 472 X (4.7K)		B	54.1/38.1
R451	7030005220	S.RES	ERJ2GEJ 223 X (22K)		B	52.4/34.8
R452	7030005060	S.RES	ERJ2GEJ 333 X (33K)		B	54/34.8
R453	7030010040	S.RES	ERJ2GEJ-JPW	[CHN]	B	90/14.9
	7030010040	S.RES	ERJ2GEJ-JPW	[EUR-1]		
	7030010040	S.RES	ERJ2GEJ-JPW	[EUR]		
	7030010040	S.RES	ERJ2GEJ-JPW	[UK]		
	7030010040	S.RES	ERJ2GEJ-JPW	[FRG]		
	7030010040	S.RES	ERJ2GEJ-JPW	[HOL]		
R454	7030010040	S.RES	ERJ2GEJ-JPW		B	61.3/21.6
R456	7030005040	S.RES	ERJ2GEJ 472 X (4.7K)		B	88.4/25.4
R457	7030005090	S.RES	ERJ2GEJ 104 X (100K)		B	73.7/37.8
C1	4030016930	S.CER	ECJ0EB1A104K		B	38/16.6
C2	4030016790	S.CER	ECJ0EB1C103K		B	28.8/18.8
C3	4030017440	S.CER	ECJ0EC1H221J		B	30/16.8
C4	4030017640	S.CER	ECJ0EC1H150J		B	28.7/16.4
C5	4030017640	S.CER	ECJ0EC1H150J		B	28.8/8.4
C6	4030017460	S.CER	ECJ0EB1E102K		B	45.8/11.3
C7	4030016790	S.CER	ECJ0EB1C103K		B	34.1/15.2
C8	4030017350	S.CER	ECJ0EC1H020B		T	18.8/6.3
C9	4030017350	S.CER	ECJ0EC1H020B		T	16.4/6.3
C11	4550007480	S.TAN	F930J106MAABMA		B	37.8/6
C12	4030017460	S.CER	ECJ0EB1E102K		T	14.9/8.2
C13	4030016930	S.CER	ECJ0EB1A104K		B	37.8/7.8
C15	4030017460	S.CER	ECJ0EB1E102K		B	26.4/6.5
C16	4030017460	S.CER	ECJ0EB1E102K		B	34.8/5.2
C17	4030017460	S.CER	ECJ0EB1E102K		B	30.4/4.3
C20	4030017460	S.CER	ECJ0EB1E102K		B	45.5/16.4
C21	4030017610	S.CER	ECJ0EC1H090C		B	45.5/17.3
C22	4030017610	S.CER	ECJ0EC1H090C		B	45.5/19.7
C24	4550000550	S.TAN	TEESVA 1V 224M8R		B	41.3/6.7
C25	4030017460	S.CER	ECJ0EB1E102K		B	45.8/9.5
C26	4030018010	S.CER	ECJ0EC1H360J		B	48.6/7.7

M.=Mounted side (T: Mounted on the Top side, B: Mounted on the Bottom side)
S.=Surface mount

[MAIN UNIT]

REF NO.	PARTS NO.	DESCRIPTION		M.	H/V LOCATION
C27	4030018010	S.CER ECJ0EC1H360J		B	45.8/10.4
C28	4030017460	S.CER ECJ0EB1E102K		B	45.7/13.8
C29	4030017460	S.CER ECJ0EB1E102K		B	51.6/12.1
C30	4030017460	S.CER ECJ0EB1E102K		B	45.7/14.7
C31	4030017460	S.CER ECJ0EB1E102K		B	56.5/14.1
C32	4030017550	S.CER ECJ0EC1H1R5B		B	53.1/9.6
C33	4030017440	S.CER ECJ0EC1H221J		B	56.8/11.7
C34	4030017550	S.CER ECJ0EC1H1R5B		B	55.3/8.2
C35	4030017460	S.CER ECJ0EB1E102K		B	56.8/10.8
C36	4030017460	S.CER ECJ0EB1E102K		B	52.6/15
C37	4030017520	S.CER ECJ0EC1H0R3B		B	53.1/13.2
C38	4030017460	S.CER ECJ0EB1E102K		B	54.1/19.3
C39	4030017630	S.CER ECJ0EC1H120J		B	53.2/18.9
C40	4030017640	S.CER ECJ0EC1H150J		B	57.4/16.7
C41	4030017460	S.CER ECJ0EB1E102K		B	51.2/18.9
C42	4030017380	S.CER ECJ0EC1H050B		B	52.2/18.9
C43	4030017400	S.CER ECJ0EC1H220J		B	46.7/19.3
C44	4030017460	S.CER ECJ0EB1E102K		B	50/14
C50	4030017460	S.CER ECJ0EB1E102K		B	65.7/15.9
C51	4030017400	S.CER ECJ0EC1H220J		B	63.9/13.4
C52	4030017460	S.CER ECJ0EB1E102K		B	63.9/12.5
C53	4030017460	S.CER ECJ0EB1E102K		B	61.5/10.7
C54	4030017640	S.CER ECJ0EC1H150J		B	64.3/8
C55	4030017410	S.CER ECJ0EC1H240J		B	62.7/8
C56	4030016790	S.CER ECJ0EB1C103K		T	91.8/16.6
C57	4030016930	S.CER ECJ0EB1A104K		T	99/16.1
C58	4030016930	S.CER ECJ0EB1A104K		T	91.8/14.5
C59	4030017730	S.CER ECJ0EB1E471K		T	92.7/12.9
C60	4030017460	S.CER ECJ0EB1E102K		T	90.5/13.2
C61	4510008570	S.ELE EEE1CA220SR		B	104/21.5
C62	4030017460	S.CER ECJ0EB1E102K		B	79.3/13.2
C63	4030016790	S.CER ECJ0EB1C103K		B	69.6/16
C64	4030017460	S.CER ECJ0EB1E102K		B	64/5
C65	4030017430	S.CER ECJ0EC1H101J		B	70.6/11.6
C66	4030017460	S.CER ECJ0EB1E102K		B	71.9/5.3
C67	4030017730	S.CER ECJ0EB1E471K		B	82.5/11.7
C68	4030017420	S.CER ECJ0EC1H470J		B	81.8/12.8
C69	4030017420	S.CER ECJ0EC1H470J		B	68.8/14.9
C70	4030007130	S.CER C1608 CH 1H 101J-T		B	83/8.2
C71	4030008560	S.CER C1608 CH 1H 300J-T		B	87.7/7.2
C72	4030006860	S.CER C1608 JB 1H 102K-T		B	87.7/8.6
C73	4030017460	S.CER ECJ0EB1E102K		B	92.1/10.2
C74	4030017460	S.CER ECJ0EB1E102K		B	93.8/6.8
C77	4030016930	S.CER ECJ0EB1A104K		B	63.1/5
C78	4030016930	S.CER ECJ0EB1A104K		B	71/5.3
C80	4030017460	S.CER ECJ0EB1E102K		B	98.7/8.5
C81	4030017390	S.CER ECJ0EC1H180J		B	90.3/5.4
C82	4030017390	S.CER ECJ0EC1H180J		B	92/5.4
C83	4030017400	S.CER ECJ0EC1H220J		B	99.3/7
C84	4030018120	S.CER ECJ0EC1H110J		B	102.7/9.1
C85	4030017410	S.CER ECJ0EC1H240J		B	102.7/7.2
C86	4030017610	S.CER ECJ0EC1H090C		B	104.8/8
C89	4030017590	S.CER ECJ0EC1H070C		B	104.3/9.3
C90	4030017610	S.CER ECJ0EC1H090C		B	97.8/9.7
C91	4030017620	S.CER ECJ0EC1H100C		B	94.4/14.5
C92	4030017460	S.CER ECJ0EB1E102K		B	88/16.6
C93	4030017460	S.CER ECJ0EB1E102K	[CHN]	B	89.7/16.2
	4030017460	S.CER ECJ0EB1E102K	[EUR-1]		
	4030017460	S.CER ECJ0EB1E102K	[EUR]		
	4030017460	S.CER ECJ0EB1E102K	[UK]		
	4030017460	S.CER ECJ0EB1E102K	[FRG]		
	4030017460	S.CER ECJ0EB1E102K	[HOL]		
C94	4030017570	S.CER ECJ0EC1H040B		B	84.9/16.6
C95	4030017400	S.CER ECJ0EC1H220J		B	79.7/22.9
C96	4030017460	S.CER ECJ0EB1E102K		B	78.9/24.6
C97	4030017360	S.CER ECJ0EC1H030B		B	84.3/15.1
C98	4030017350	S.CER ECJ0EC1H020B		B	78.5/23.4
C99	4030017650	S.CER ECJ0EC1H270J		B	77.9/24.6
C100	4030017570	S.CER ECJ0EC1H040B		B	76.8/21.6
C101	4030017400	S.CER ECJ0EC1H220J	[USA]	B	75.9/22.5
	4030017400	S.CER ECJ0EC1H220J	[SEA]		
	4030017620	S.CER ECJ0EC1H100C	[CHN]		
	4030017620	S.CER ECJ0EC1H100C	[EUR-1]		
	4030017620	S.CER ECJ0EC1H100C	[EUR]		
	4030017620	S.CER ECJ0EC1H100C	[UK]		
	4030017620	S.CER ECJ0EC1H100C	[FRG]		
	4030017620	S.CER ECJ0EC1H100C	[HOL]		
	4030017400	S.CER ECJ0EC1H220J	[AUS]		
C102	4030016790	S.CER ECJ0EB1C103K		B	70.3/24.4
C103	4030017420	S.CER ECJ0EC1H470J		B	70.3/25.3
C104	4030016790	S.CER ECJ0EB1C103K		B	70/27
C109	4030017460	S.CER ECJ0EB1E102K		B	67.3/23.2
C110	4030017660	S.CER ECJ0EC1H330J		B	65.7/26.2
C111	4030017460	S.CER ECJ0EB1E102K		B	64.5/28.5
C112	4030017570	S.CER ECJ0EC1H040B	[USA]	B	66.4/20.7
	4030017570	S.CER ECJ0EC1H040B	[SEA]		
	4030017360	S.CER ECJ0EC1H030B	[CHN]		
	4030017360	S.CER ECJ0EC1H030B	[EUR-1]		
	4030017360	S.CER ECJ0EC1H030B	[EUR]		
	4030017360	S.CER ECJ0EC1H030B	[UK]		
	4030017360	S.CER ECJ0EC1H030B	[FRG]		
	4030017360	S.CER ECJ0EC1H030B	[HOL]		
	4030017570	S.CER ECJ0EC1H040B	[AUS]		
C113	4030017540	S.CER ECJ0EC1HR75B		B	66.4/24.1
C114	4030017670	S.CER ECJ0EC1H390J	[USA]	B	64.5/27.4
	4030017670	S.CER ECJ0EC1H390J	[SEA]		
	4030017420	S.CER ECJ0EC1H470J	[CHN]		
	4030017420	S.CER ECJ0EC1H470J	[EUR-1]		
	4030017420	S.CER ECJ0EC1H470J	[EUR]		
	4030017420	S.CER ECJ0EC1H470J	[UK]		
	4030017420	S.CER ECJ0EC1H470J	[FRG]		
	4030017420	S.CER ECJ0EC1H470J	[HOL]		
	4030017670	S.CER ECJ0EC1H390J	[AUS]		
C115	4030017380	S.CER ECJ0EC1H050B		B	65.9/22.8

[MAIN UNIT]

REF NO.	PARTS NO.	DESCRIPTION		M.	H/V LOCATION
C116	4030017570	S.CER ECJ0EC1H040B		B	63.9/24
C117	4030017370	S.CER ECJ0EC1H3R5B	[USA]	B	77.6/22.5
	4030017370	S.CER ECJ0EC1H3R5B	[SEA]		
	4030017350	S.CER ECJ0EC1H020B	[CHN]		
	4030017350	S.CER ECJ0EC1H020B	[EUR-1]		
	4030017350	S.CER ECJ0EC1H020B	[EUR]		
	4030017350	S.CER ECJ0EC1H020B	[UK]		
	4030017350	S.CER ECJ0EC1H020B	[FRG]		
	4030017350	S.CER ECJ0EC1H020B	[HOL]		
	4030017370	S.CER ECJ0EC1H3R5B	[AUS]		
C119	4030017420	S.CER ECJ0EC1H470J	[USA]	B	56.7/25.8
	4030017420	S.CER ECJ0EC1H470J	[SEA]		
	4030017500	S.CER ECJ0EC1H560J	[CHN]		
	4030017500	S.CER ECJ0EC1H560J	[EUR-1]		
	4030017500	S.CER ECJ0EC1H560J	[EUR]		
	4030017500	S.CER ECJ0EC1H560J	[UK]		
	4030017500	S.CER ECJ0EC1H560J	[FRG]		
	4030017500	S.CER ECJ0EC1H560J	[HOL]		
	4030017420	S.CER ECJ0EC1H470J	[AUS]		
C120	4030016970	S.CER ECJ0EB1C223K		B	55.8/24.2
C121	4030017460	S.CER ECJ0EB1E102K		B	54.9/24.2
C122	4030016790	S.CER ECJ0EB1C103K		B	61/17.4
C125	4030016930	S.CER ECJ0EB1A104K		B	35.1/18.1
C126	4030017460	S.CER ECJ0EB1E102K		B	37.4/15.2
C127	4030017420	S.CER ECJ0EC1H470J		B	24/10
C128	4030017730	S.CER ECJ0EB1E471K		B	24/11.6
C129	4030016930	S.CER ECJ0EB1A104K		B	23.8/8.3
C130	4030017340	S.CER ECJ0EC1H010B	[CHN]	B	62.6/20.2
	4030017340	S.CER ECJ0EC1H010B	[EUR-1]		
	4030017340	S.CER ECJ0EC1H010B	[EUR]		
	4030017340	S.CER ECJ0EC1H010B	[UK]		
	4030017340	S.CER ECJ0EC1H010B	[FRG]		
	4030017340	S.CER ECJ0EC1H010B	[HOL]		
C131	4030017620	S.CER ECJ0EC1H100C		B	62.6/21.1
C132	4030017460	S.CER ECJ0EB1E102K		B	35.5/16.6
C133	4030017460	S.CER ECJ0EB1E102K		T	20.1/8.9
C134	4030017580	S.CER ECJ0EC1H060C		B	55.8/25.8
C154	4030017460	S.CER ECJ0EB1E102K		B	52.6/25.7
C155	4030017360	S.CER ECJ0EC1H030B		T	25.5/22.1
C156	4030017460	S.CER ECJ0EB1E102K		T	22.9/13.6
C157	4030016970	S.CER ECJ0EB1C223K		T	20.2/17.5
C158	4030017460	S.CER ECJ0EB1E102K		T	20.2/18.4
C159	4030016790	S.CER ECJ0EB1C103K		T	18.3/13
C160	4030018240	S.CER ECJ0EB1E562K		T	17.3/16.9
C170	4030017460	S.CER ECJ0EB1E102K		B	16.2/13.6
C171	4030017680	S.CER ECJ0EC1H820J		B	15.9/16.4
C174	4030017460	S.CER ECJ0EB1E102K		B	13.8/18.6
C176	4030017460	S.CER ECJ0EB1E102K		B	15/19.9
C177	4030016930	S.CER ECJ0EB1A104K		B	6.8/15.3
C178	4030018890	S.CER ECJ0EB0J224K		B	6.8/14.4
C179	4030017720	S.CER ECJ0EB1H331K		B	6.3/17.6
C180	4030017720	S.CER ECJ0EB1H331K		B	8.4/18.4
C181	4030016930	S.CER ECJ0EB1A104K		B	6.8/16.3
C191	4030016790	S.CER ECJ0EB1C103K		B	16.8/29.7
C192	4510008540	S.ELE EEE1CA100SR		B	40.2/21.2
C193	4030016790	S.CER ECJ0EB1C103K		B	25.2/44.4
C194	4030016790	S.CER ECJ0EB1C103K		B	15.2/42
C200	4030016790	S.CER ECJ0EB1C103K		B	15.9/29.7
C202	4030016930	S.CER ECJ0EB1A104K		B	7.9/29.4
C205	4030016960	S.CER ECJ0EB1C183K		B	8.5/24.5
C206	4030017460	S.CER ECJ0EB1E102K		B	8.8/23.2
C207	4030016930	S.CER ECJ0EB1A104K		B	7.6/22.9
C220	4510008660	S.ELE EEE0JA220SR		B	57.6/37
C221	4030016790	S.CER ECJ0EB1C103K		B	62.5/35.8
C222	4030016790	S.CER ECJ0EB1C103K		B	65.1/34.9
C223	4030016790	S.CER ECJ0EB1C103K		B	67.9/35.8
C224	4510008660	S.ELE EEE0JA220SR		B	65.3/47.1
C225	4030018890	S.CER ECJ0EB0J224K		B	59.1/44.5
C226	4030016790	S.CER ECJ0EB1C103K		B	94.6/19.8
C227	4550005980	S.TAN TEESVA 1A 475M8R		B	57.3/46.1
C228	4030017460	S.CER ECJ0EB1E102K		B	93.9/22
C229	4030017460	S.CER ECJ0EB1E102K		B	105.1/27.5
C230	4550007380	S.TAN F931D225MAABMA		B	105.1/25.9
C231	4030018890	S.CER ECJ0EB0J224K		B	53.4/32.7
C233	4030016790	S.CER ECJ0EB1C103K		B	62.2/47.5
C250	4030016930	S.CER ECJ0EB1A104K		B	79.8/43.4
C251	4510008540	S.ELE EEE1CA100SR		B	72.4/47.1
C252	4030017460	S.CER ECJ0EB1E102K		B	31.5/45.2
C253	4030016950	S.CER ECJ0EB1A473K		B	30.2/46.2
C254	4030016930	S.CER ECJ0EB1A104K		B	15/35.3
C260	4510008540	S.ELE EEE1CA100SR		B	20.6/33
C261	4030016930	S.CER ECJ0EB1A104K	[USA]	B	10/35.1
	4030016930	S.CER ECJ0EB1A104K	[SEA]		
	4030018890	S.CER ECJ0EB0J224K	[CHN]		
	4030018890	S.CER ECJ0EB0J224K	[EUR-1]		
	4030018890	S.CER ECJ0EB0J224K	[EUR]		
	4030018890	S.CER ECJ0EB0J224K	[UK]		
	4030018890	S.CER ECJ0EB0J224K	[FRG]		
	4030018890	S.CER ECJ0EB0J224K	[HOL]		
	4030018890	S.CER ECJ0EB0J224K	[AUS]		
C262	4030016790	S.CER ECJ0EB1C103K		B	7.5/36.4
C263	4030016790	S.CER ECJ0EB1C103K		B	11.5/23.6
C264	4030018240	S.CER ECJ0EB1E562K		B	13.6/22.5
C265	4030017690	S.CER ECJ0EC1H121J		B	14.1/25.4
C266	4030017030	S.CER ECJ0EB1A273K		B	16.1/24.2
C280	4030018900	S.CER ECJ0EB0J474K		B	49.9/41.4
C282	4510008540	S.ELE EEE1CA100SR		B	48.6/32.3
C283	4030016930	S.CER ECJ0EB1A104K		B	48.2/40.5
C284	4030017460	S.CER ECJ0EB1E102K		B	48.2/39.6
C285	4030016930	S.CER ECJ0EB1A104K		B	51.7/39.6
C286	4510009530	S.ELE 10 CE 150 BSS		B	40.8/34.9
C288	4030016950	S.CER ECJ0EB1A473K		B	44.6/47.3
C289	4510009530	S.ELE 10 CE 150 BSS		B	40.3/43.7
C300	4030017770	S.CER ECJ0EB1E332K		B	7.9/27

M.=Mounted side (T: Mounted on the Top side, B: Mounted on the Bottom side)
S.=Surface mount

[MAIN UNIT]

REF NO.	PARTS NO.	DESCRIPTION		M.	H/V LOCATION
C340	4030016790	S.CER	ECJ0EB1C103K	B	97.4/30.6
C341	4030008890	S.CER	C1608 JB 1H 273K-T	B	94.9/34.3
C350	4030016790	S.CER	ECJ0EB1C103K	T	104.3/24.8
C351	4030016790	S.CER	ECJ0EB1C103K	B	88.1/27
C360	4030016790	S.CER	ECJ0EB1C103K	T	97.7/19.1
C361	4030016950	S.CER	ECJ0EB1A473K	T	90.4/41.1
C363	4030016950	S.CER	ECJ0EB1A473K	T	94/41.3
C364	4030016950	S.CER	ECJ0EB1A473K	T	94.9/41.3
C365	4030016950	S.CER	ECJ0EB1A473K	T	96.6/41.3
C366	4030016950	S.CER	ECJ0EB1A473K	T	99.3/40.7
C367	4030016950	S.CER	ECJ0EB1A473K	T	93.1/41.3
C370	4030018070	S.CER	ECJ0EC1H300J	B	95/30.9
C371	4030017400	S.CER	ECJ0EC1H220J	B	95.6/32.1
C372	4030016930	S.CER	ECJ0EB1A104K	B	84.7/35.9
C373	4030018900	S.CER	ECJ0EB0J474K	T	87.5/35.2
C374	4030018900	S.CER	ECJ0EB0J474K	T	89.9/37.8
C375	4030018900	S.CER	ECJ0EB0J474K	T	89/38.1
C377	4030017740	S.CER	ECJ0EB1E821K	B	9.1/28.2
C378	4030017780	S.CER	ECJ0EB1E472K	B	9.4/26.1
C379	4030017420	S.CER	ECJ0EC1H470J	B	12.2/25.4
C380	4030017460	S.CER	ECJ0EB1E102K	T	87.3/13.4
C381	4030017460	S.CER	ECJ0EB1E102K	T	99.5/14.3
C382	4030018860	S.CER	ECJ0EB0J105K	B	27.6/46.2
C383	4030018860	S.CER	ECJ0EB0J105K	B	13.9/37.8
C384	4030016930	S.CER	ECJ0EB1A104K	B	79.8/44.3
C385	4030016790	S.CER	ECJ0EB1C103K	B	9.1/35.1
C386	4030018900	S.CER	ECJ0EB0J474K	T	90/39.3
C387	4030017460	S.CER	ECJ0EB1E102K	T	91.3/41.5
C389	4550007520	S.TAN	F931A106MAABMA	B	90.9/23.5
C390	4030017460	S.CER	ECJ0EB1E102K	B	105.1/29.3
C391	4030017460	S.CER	ECJ0EB1E102K	B	60.4/45.2
C392	4030017460	S.CER	ECJ0EB1E102K	B	103.2/34.4
C393	4030016950	S.CER	ECJ0EB1A473K	T	97.5/41.3
C394	4030016950	S.CER	ECJ0EB1A473K	T	92.2/41.5
C410	4030017420	S.CER	ECJ0EC1H470J	T	105.3/41.8
C411	4030017420	S.CER	ECJ0EC1H470J	T	103.4/46.4
C412	4030017420	S.CER	ECJ0EC1H470J	T	109.6/38.1
C413	4030017420	S.CER	ECJ0EC1H470J	T	100.8/44.3
C414	4030017440	S.CER	ECJ0EC1H221J	T	100.8/45.2
C415	4030017440	S.CER	ECJ0EC1H221J	T	103.4/45.5
C417	4030017460	S.CER	ECJ0EB1E102K	B	14.1/39.1
C421	4030016790	S.CER	ECJ0EB1C103K	B	52.6/47.6
C422	4030016950	S.CER	ECJ0EB1A473K	B	45.2/39.4
C423	4550004040	S.TAN	TEESVA 0J 685M8R	B	54.3/44.5
C424	4030017460	S.CER	ECJ0EB1E102K	B	75.8/37.6
C426	4030018860	S.CER	ECJ0EB0J105K	B	73.9/42.1
C427	4030016930	S.CER	ECJ0EB1A104K	B	74.4/43.3
C428	4030016960	S.CER	ECJ0EB1C183K	B	69.2/45.3
C429	4030016960	S.CER	ECJ0EB1C183K	B	69.1/44.1
C430	4030017730	S.CER	ECJ0EB1E471K	B	68.5/42
C431	4030016930	S.CER	ECJ0EB1A104K	B	74.3/35.2
C432	4030017460	S.CER	ECJ0EB1E102K	T	98.4/41.3
C433	4030016930	S.CER	ECJ0EB1A104K	B	68.7/38.2
C434	4030016950	S.CER	ECJ0EB1A473K	B	73.7/39.7
C435	4030018890	S.CER	ECJ0EB0J224K	B	99.5/27.7
J250	6450001910	CON	HSJ1594-010150		
J252	6510022691	S.CON	06FLT-SM2-TB(LF)(SN)	B	86.1/39.3
J253	6510021901	S.CON	BM02B-ASRS-TF(LF)(SN)	B	78.9/39.3
DS240	5040003060	S.LED	SML-512WWT86	T	92.2/4.7
DS241	5040003060	S.LED	SML-512WWT86	T	99.7/4.7
DS242	5040002310	S.LED	SML-311YTT86	T	47.7/34
DS243	5040002310	S.LED	SML-311YTT86	T	62.9/34.8
DS244	5040002310	S.LED	SML-311YTT86	T	47.7/18.4
DS245	5040002310	S.LED	SML-311YTT86	T	62.9/17.6
DS246	5030003000	LCD	S11000 <SUC>		
MC250	7700002710	MIC	EM6027P-46C33-G <HOR>		
S250	2260002840	SWI	SKHLLFA010		
W1	9011710006	WIR	24/00/030/W01/W01 <TJM>[CHN]		
	9011710006	WIR	24/00/030/W01/W01<TJM> [EUR-1]		
	9011710006	WIR	24/00/030/W01/W01 <TJM>[EUR]		
	9011710006	WIR	24/00/030/W01/W01 <TJM> [UK]		
	9011710006	WIR	24/00/030/W01/W01 <TJM>[FRG]		
	9011710006	WIR	24/00/030/W01/W01 <TJM>[HOL]		
W2	9031680010	WIR	24/04/030/W01/W01 <TJM>[CHN]		
	9031680010	WIR	24/04/030/W01/W01<TJM> [EUR-1]		
	9031680010	WIR	24/04/030/W01/W01 <TJM>[EUR]		
	9031680010	WIR	24/04/030/W01/W01 <TJM> [UK]		
	9031680010	WIR	24/04/030/W01/W01 <TJM>[FRG]		
	9031680010	WIR	24/04/030/W01/W01 <TJM>[HOL]		
EP2	6910014690	S.BEA	MPZ1608S221A-T	B	72.3/16
EP3	6910014690	S.BEA	MPZ1608S221A-T	B	80.4/13.4
EP4	6910012350	S.BEA	MMZ1608Y 102BT	T	103/43.1
EP5	6910012350	S.BEA	MMZ1608Y 102BT	T	105.4/39.8
EP6	6910012350	S.BEA	MMZ1608Y 102BT	T	111.8/35.7
EP7	6910012350	S.BEA	MMZ1608Y 102BT	T	104.8/45.4
EP360	8930077940	LCD	SRCN-3168-SP-N-W (SHJ)		
MP20	8510016470	S.CAS	2775 VCO CASE	B	51.5/13.3

M.=Mounted side (T: Mounted on the Top side, B: Mounted on the Bottom side)

S.=Surface mount

SECTION 7 MECHANICAL PARTS

[CHASSIS PARTS]

REF NO.	ORDER NO.	DESCRIPTION		QTY.
J31	6910014190	2497 ANT CONNECTOR		1
MC1	7700002890	EM6027-46C33-G-02		1
SP1	2510001510	PSC-3656PA		1
W2*	8900016360	OPC-1190A		1
MP1	8210025450	3168 FRONT PANEL ASSY (Incl. SP1, MP2, 3, 5–7, 19, 51, 54)		1
MP2	8310073150	3168 WINDOW PLATE	[IC-M36]	1
	8310073200	3168 WINDOW PLATE (A)	[IC-M35]	1
MP3	8930011900	SPEAKER NET (A) (FX-573)		1
MP4	8930068980	2905 VENT SHEET		1
MP5	8930078000	3168 KEYBOARD	[IC-M36]	1
	8930078220	3168 KEYBOARD (A)	[IC-M35]	1
MP6	8930078090	3168 PTT BUTTON		1
MP7	8930078110	3168 PTT HOLDER		1
MP8	8610011151	2497 BATT LOCK-1		1
MP9	8930056941	2497 LOCK PLATE-1		1
MP14	8850001950	SEALING WASHER (Y)		1
MP15	8830001720	2721 ANT NUT		1
MP16	8930070980	2987 MIC CAP		1
MP18	8930078010	3168 MIC SEAL		1
MP19	8930078180	3168 WINDOW SHEET		1
MP21	8210025300	3168 REAR PANEL		1
MP22	8930077930	3168 MAIN SEAL		1
MP23	8810010850	SCREW BTB0 2X8SUS SSBC (BT)		2
MP24	8820001510	3062 SCREW		2
MP25	8930063690	O-RING (BA)		2
MP31	8010021460	3168 CHASSIS		1
MP32	8930078080	3168 TERMINAL HOLDER		1
MP33	8810009511	SCREW BT B0 2X4 NI-ZC3 (BT)		2
MP34	8930078030	3168 A-TERMINAL		1
MP35	8930078100	3168 B-TERMINAL		1
MP37	8930078040	3168 C-TERMINAL		1
MP39	8810009511	SCREW BT B0 2X4 NI-ZC3 (BT)		4
MP42	8810009561	SCREW BT B0 2X6 NI-ZK3 (BT)		3
MP48	8930030920	1301 SHEET		1
MP50	8930071260	O-RING (BL)		1
MP51	8930068980	2905 VENT SHEET		1
MP53	8930078050	3168 MIC CAP		1
MP54	8930078160	3168 PTT PLATE		1
MP55	8930078170	3168 MIC HOLDER		1
MP56	8810009561	SCREW BT B0 2X6 NI-ZK3 (BT)		2
MP57	8810009511	SCREW BT B0 2X4 NI-ZC3 (BT)		1
MP59	8810010091	SCREW BT B0 2X12NI-ZK3 (BT)		2
MP60	8930078190	3168 WHITE SHEET		1
MP61	8930078740	3168 A-WHITE SHEET		1

[MAIN UNIT]

REF NO.	ORDER NO.	DESCRIPTION	QTY.
J250*	6450001910	HSJ1594-010150	1
J252*	6510022692	06FLT-SM2-TB (LF) (SN) (M)	1
J253*	6510021901	BM02B-ASRS-TF (LF) (SN)	1
DS246	5030003000	S11000	1
MC250	7700002710	EM6027P-46C33-G	1
S250*	2260002840	SKHLLFA010	1
W1*	9011710006	24/00/030/W01/W01	1
W2*	9031680010	24/04/030/W01/W01	1
EP360	8930077940	SRCN-3168-SP-N-W	1
MP20*	8510016470	2775 VCO CASE	1
MP21*	8510016460	2775 VCO COVER	1
MP360	8210025380	3168 REFLECTOR	1
MP361	8930078120	3168 LCD HOLDER	1
MP362	8930054562	THERMALLY SHEET (T)-2	1

[ACCESSORIES]

REF NO.	ORDER NO.	DESCRIPTION		QTY.
EP1	(Optional)	FA-SC58V-1		1
EP2	(Optional)	BC-147SA	[USA]	1
	(Optional)	BC-174E	[SEA], [CHN], [EUR], [FRG], [HOL]	1
	(Optional)	BC-147SV	[AUS]	1
EP3	(Optional)	BP-251-2	[UK] only	1
EP4	(Optional)	BP-252		1
EP5	(Optional)	BC-173-1		1
EP6	6910018620	BLACK HANDY STRAP		1
MP2	(Optional)	MB-109		1
MP4	8810001460	SCREW BT A0 3.5X20 SUS		2

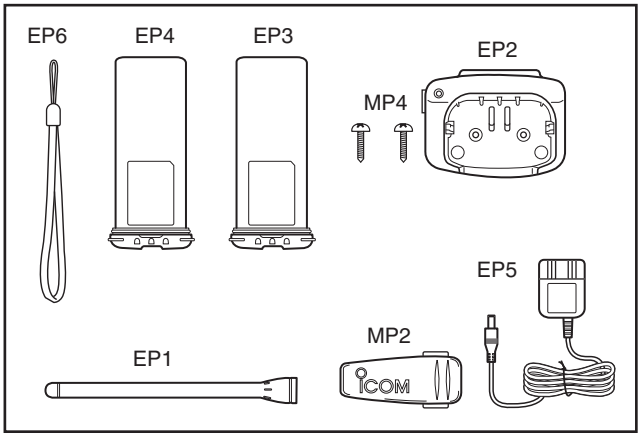

*: Refer to "**BOARD LAYOUTS**" for the location.

Screw abbreviations A, B0, BT: Self-tapping PH: Pan head ZK: Black NI-ZU: Nickel-Zinc SUS: Stainless

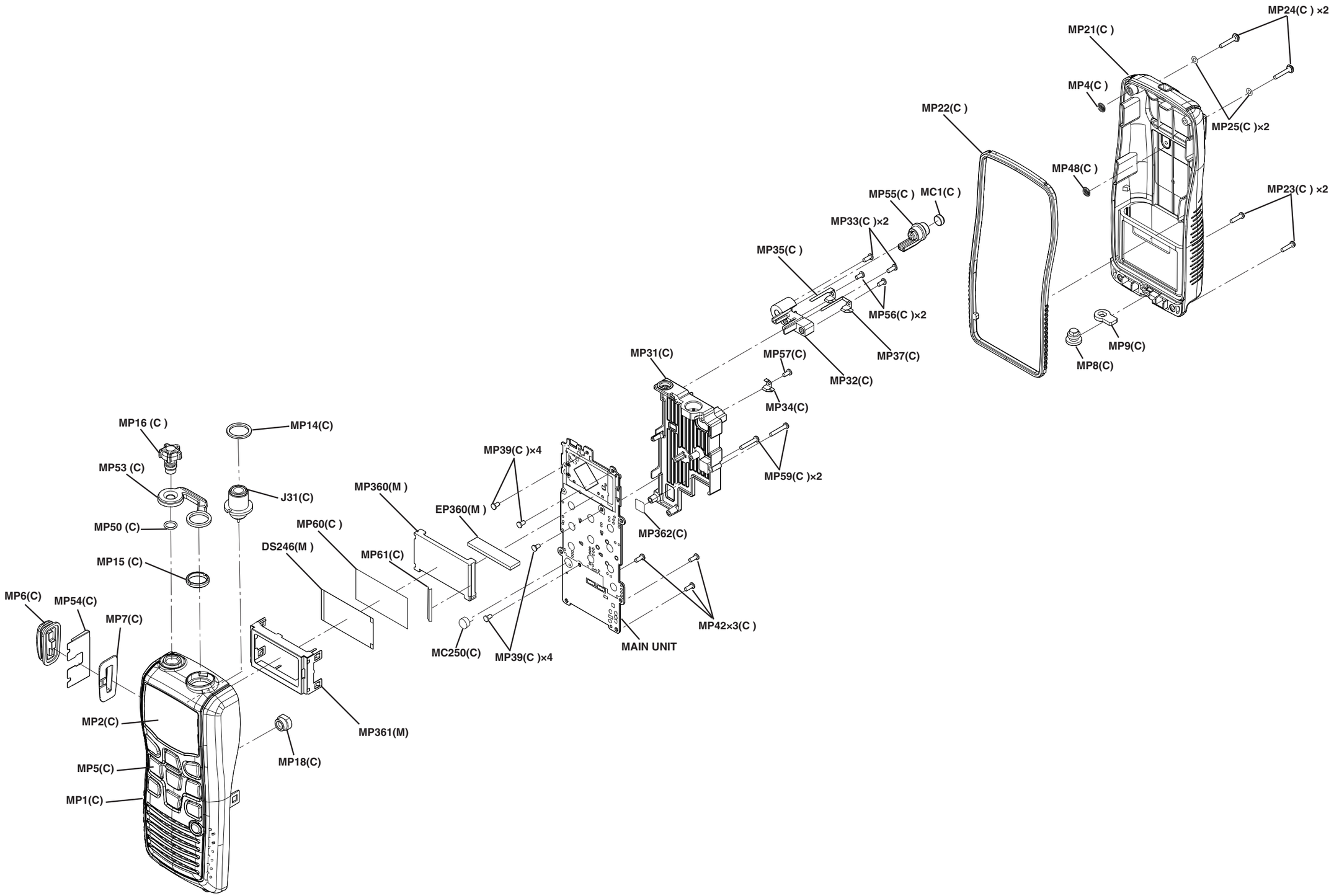
MP24(C) ×2
MP21(C)
MP4(C)
MP22(C)
MP25(C)×2
MP48(C)
MP23(C) ×2
MP55(C)
MC1(C)
MP33(C)×2
MP35(C)
MP56(C)×2
MP37(C)
MP9(C)
MP8(C)
MP31(C)
MP57(C)
MP32(C)
MP34(C)
MP16 (C)
MP14(C)
MP39(C)×4
MP53 (C)
MP59(C)×2
J31(C)
MP360(M)
EP360(M)
MP50 (C)
MP60(C)
MP362(C)
DS246(M)
MP61(C)
MP15 (C)
MP6(C)
MP54(C)
MP7(C)
MP42×3(C)
MC250(C)
MP39(C)×4
MAIN UNIT
MP2(C)
MP361(M)
MP18(C)
MP5(C)
MP1(C)

The combination of this side and the bottom side shows the board layout in the same configuration as the actual P.C.Board.

• MAIN UNIT (TOP VIEW)

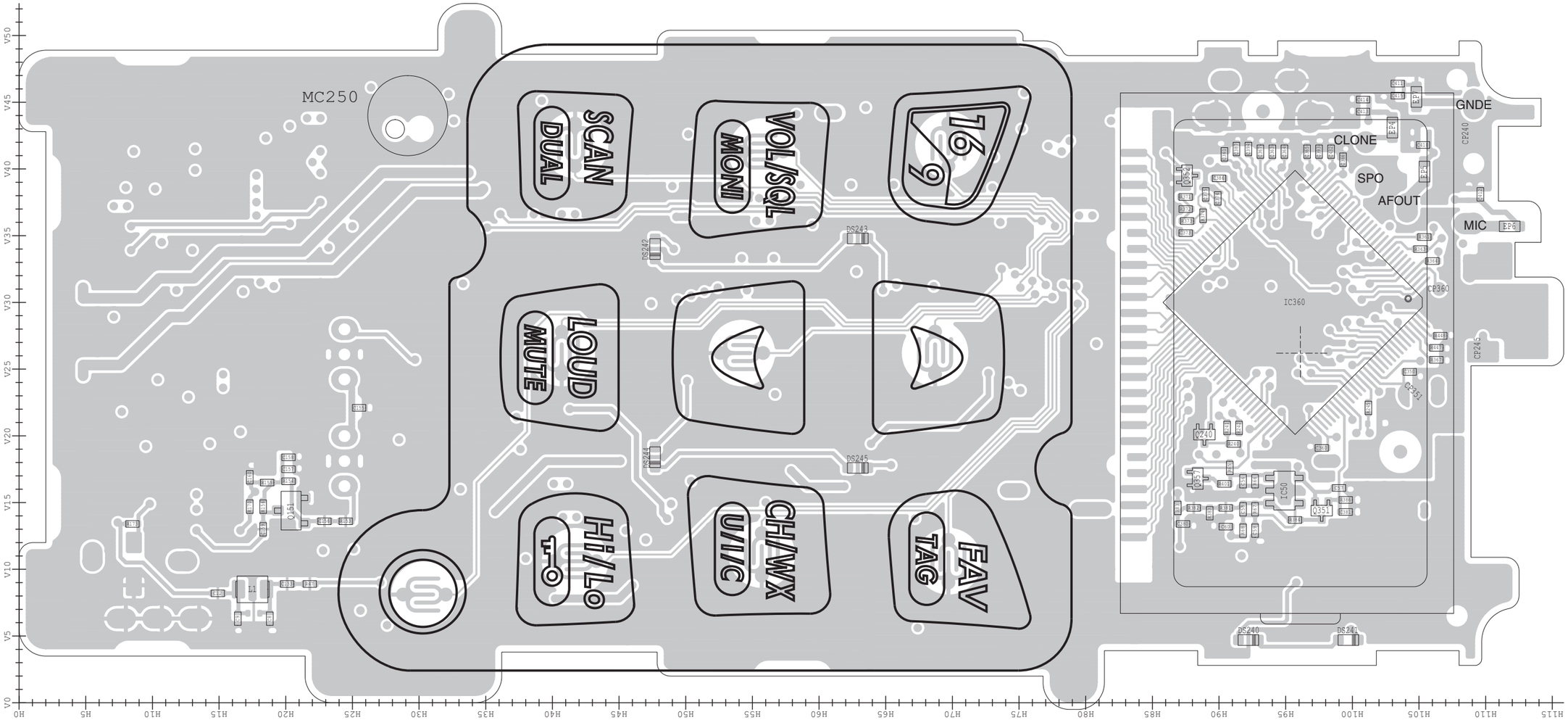

The above key top print illustration is for IC-M36 and is for your reference only. IC-M35 has different key top print.

The combination of this side and the bottom side shows the board layout in the same configuration as the actual P.C.Board.

• MAIN UNIT (BOTTOM VIEW)

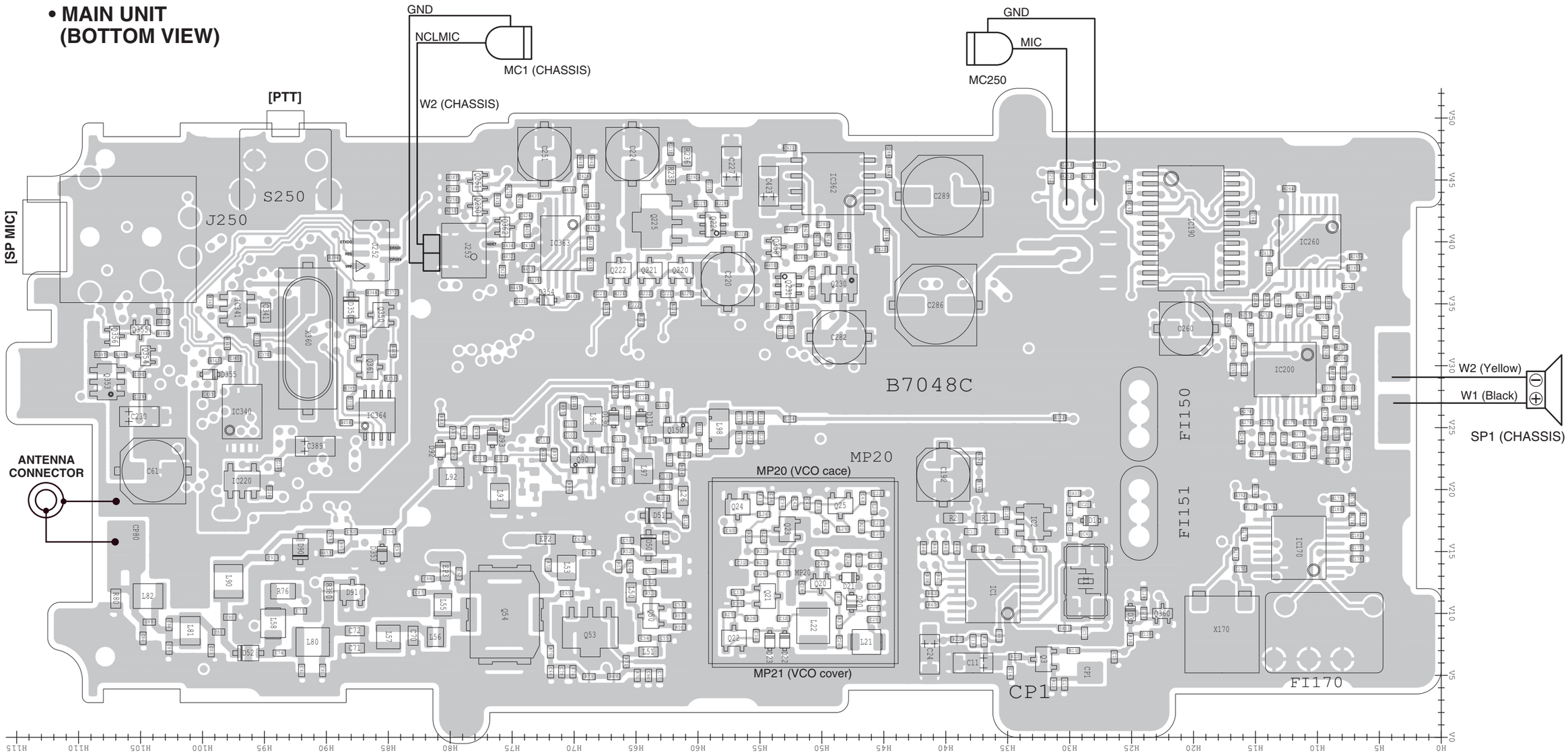

SECTION 9 BLOCK DIAGRAM

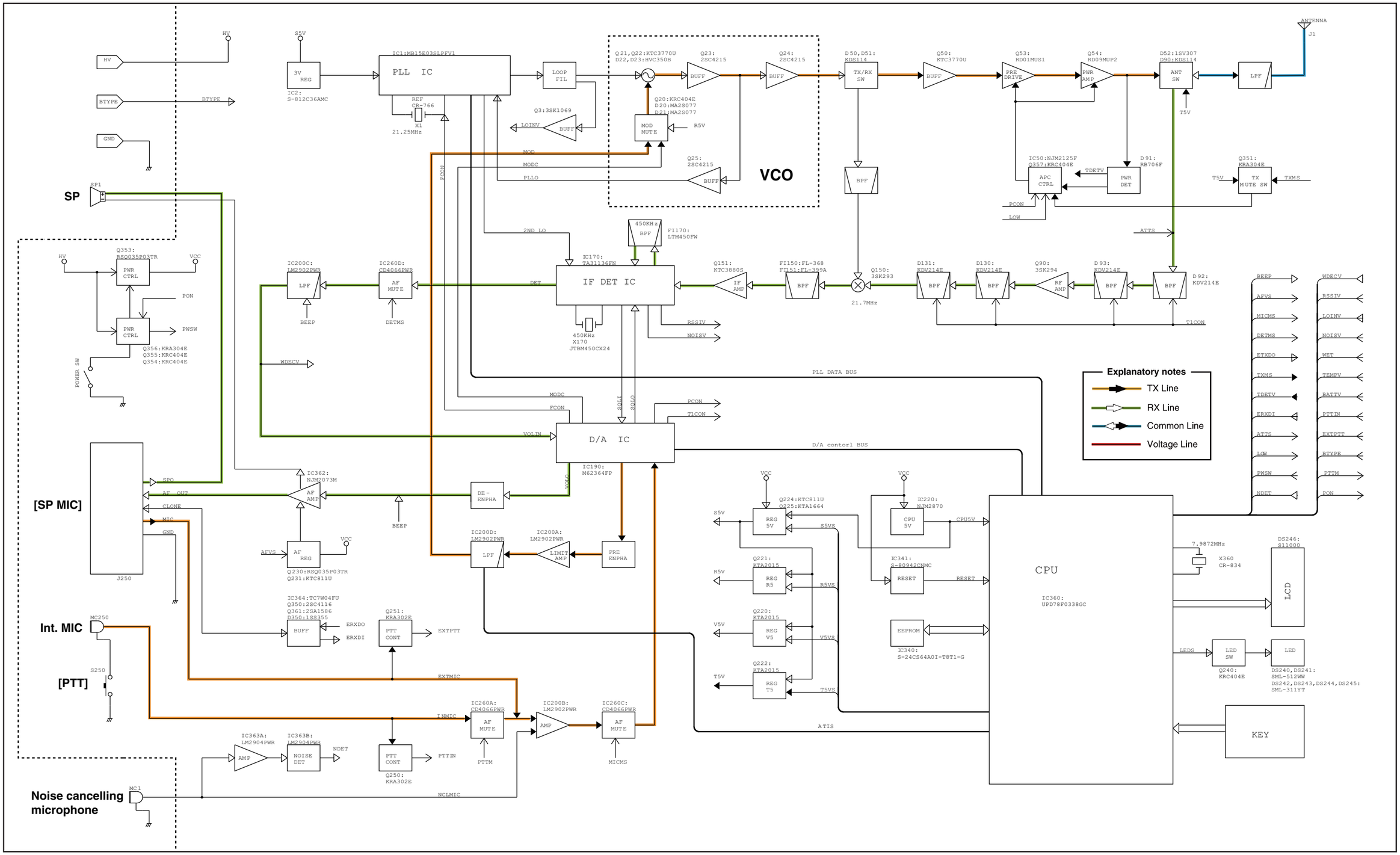

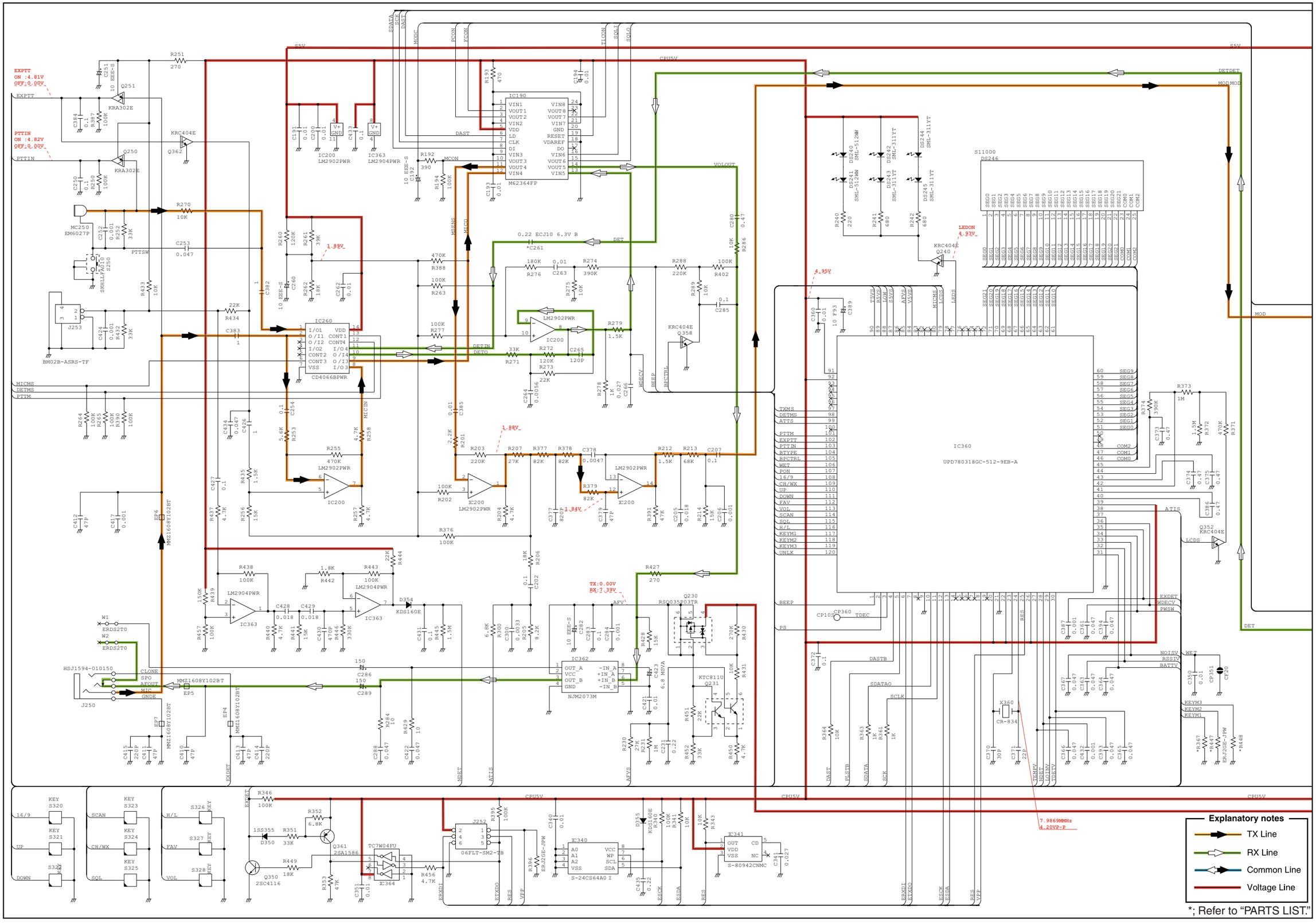
EXPTT
ON :4.81V
OFF:0.00V
PTTIN
ON :4.82V
OFF:0.00V
IC190
M62364FP
IC200
LM2902PWR
IC260
CD4066BPWR
IC360
UPD780318GC-512-9EB-A
IC362
NJM2073M
IC363
LM2904PWR
IC364
TC7W04FU
IC340
S-24CS64A0 I
IC341
S-80942CNMC
Q230
RS0035203TR
KTC811U
Q231
Q352
KRC404E
Explanatory notes
TX Line
RX Line
Common Line
Voltage Line
*; Refer to "PARTS LIST."

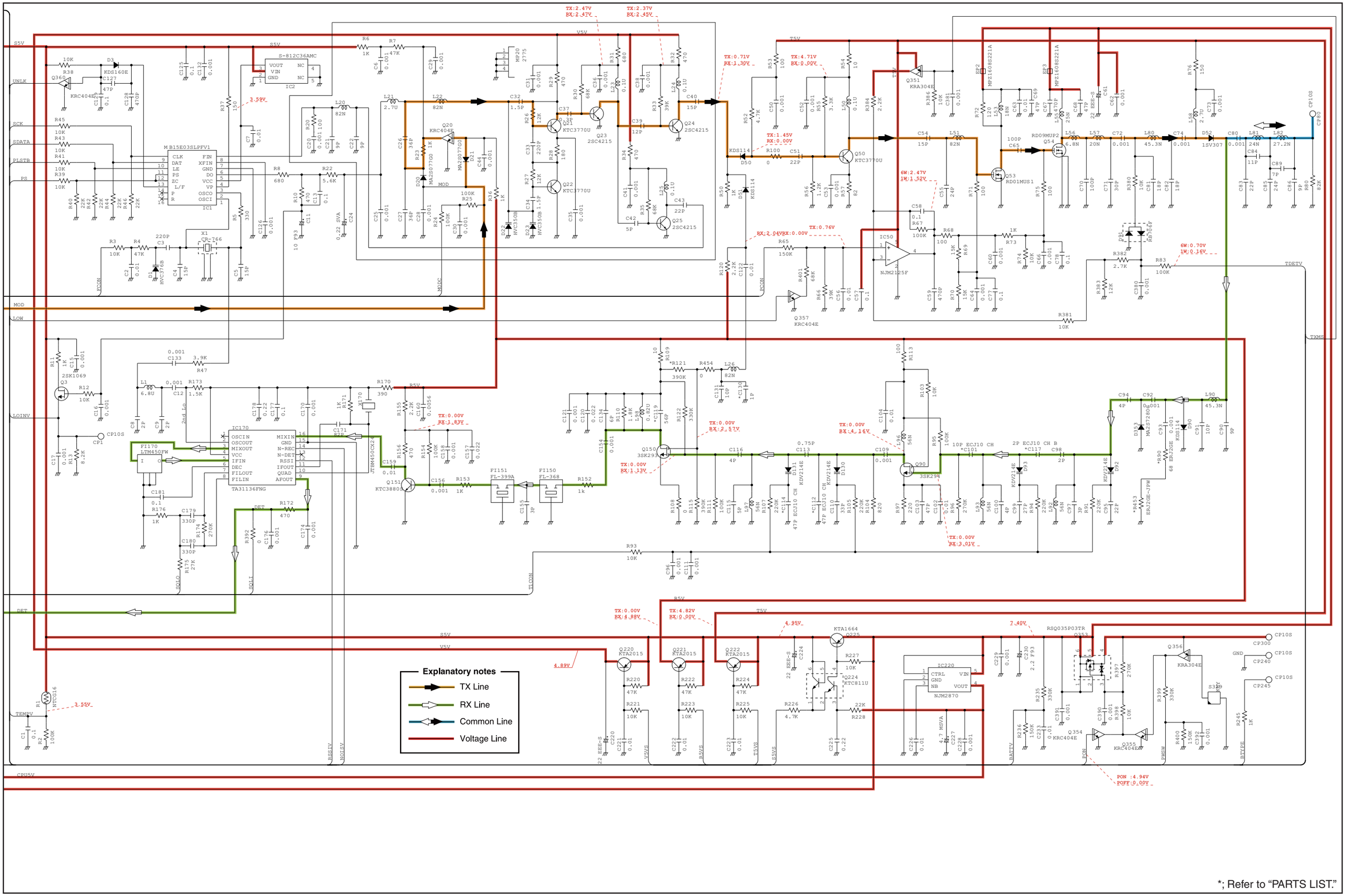

*; Refer to "PARTS LIST."

Icom Inc.

1-1-32, Kamiminami, Hirano-ku, Osaka 547-0003, Japan
Phone : +81 (06) 6793 5302
Fax : +81 (06) 6793 0013
URL : http://www.icom.co.jp/world/index.html

Icom America Inc.

<Corporate Headquarters>
2380 116th Avenue N.E., Bellevue, WA 98004, U.S.A.
Phone : +1 (425) 454-8155 Fax : +1 (425) 454-1509
URL : http://www.icomamerica.com
E-mail : sales@icomamerica.com
<Customer Service>
Phone : +1 (425) 454-7619

Icom Canada

Glenwood Centre #150-6165
Highway 17 Delta, B.C., V4K 5B8, Canada
Phone : +1 (604) 952-4266 Fax : +1 (604) 952-0090
URL : http://www.icomcanada.com
E-mail : info@icomcanada.com

Icom (Australia) Pty. Ltd.

Unit 1 / 103 Garden Road, Clayton VIC 3168 Australia
Phone : +61 (03) 9549-7500 Fax : +61 (03) 9549-7505
URL : http://www.icom.net.au
E-mail : sales@icom.net.au

Icom New Zealand

146A Harris Road, East Tamaki,
Auckland, New Zealand
Phone : +64 (09) 274 4062 Fax : +64 (09) 274 4708
URL : http://www.icom.co.nz
E-mail : inquiries@icom.co.nz

Icom Polska

81-850 Sopot, ul. 3 Maja 54, Poland
Phone : +48 (58) 550 7135 Fax : +48 (58) 551 0484
E-mail : icompolska@icompolska.com.pl

Icom (Europe) GmbH

Communication Equipment
Himmelgeister Str. 100, D-40225 Düsseldorf, Germany
Phone : +49 (0211) 346047 Fax : +49 (0211) 333639
URL : http://www.icomeurope.com
E-mail : info@icomeurope.com

Icom Spain S.L

Ctra. Rubi, No. 88 Bajos A 08174, Sant Cugat del Valles, Barcelona, Spain
Phone : +34 (93) 590 26 70 Fax : +34 (93) 589 04 46
URL : http://www.icomspain.com
E-mail : icom@icomspain.com

Icom (UK) Ltd.

Unit 9, Sea St., Herne Bay, Kent, CT6 8LD, U.K.
Phone : +44 (01227) 741741 Fax : +44 (01227) 741742
URL : http://www.icomuk.co.uk
E-mail : info@icomuk.co.uk

Icom France s.a.s.

Zac de la Plaine
1 Rue Brindejonc des Moulinais BP 5804
31505 Toulouse Cedex, France
Phone : +33 (5) 61 36 03 03 Fax : +33 (5) 61 36 03 00
URL : http://www.icom-france.com
E-mail : icom@icom-france.com

Asia Icom Inc.

6F No.68, Sec. 1 Cheng-Teh Road, Taipei, Taiwan, R.O.C.
Phone : +886 (02) 2559 1899 Fax : +886 (02) 2559 1874
URL : http://www.asia-icom.com
E-mail : sales@asia-icom.com

Count on us!

Icom Inc.
1-1-32, Kamiminami, Hirano-ku, Osaka 547-0003, Japan

S-14520XZ-C1
© 2008 Icom Inc.